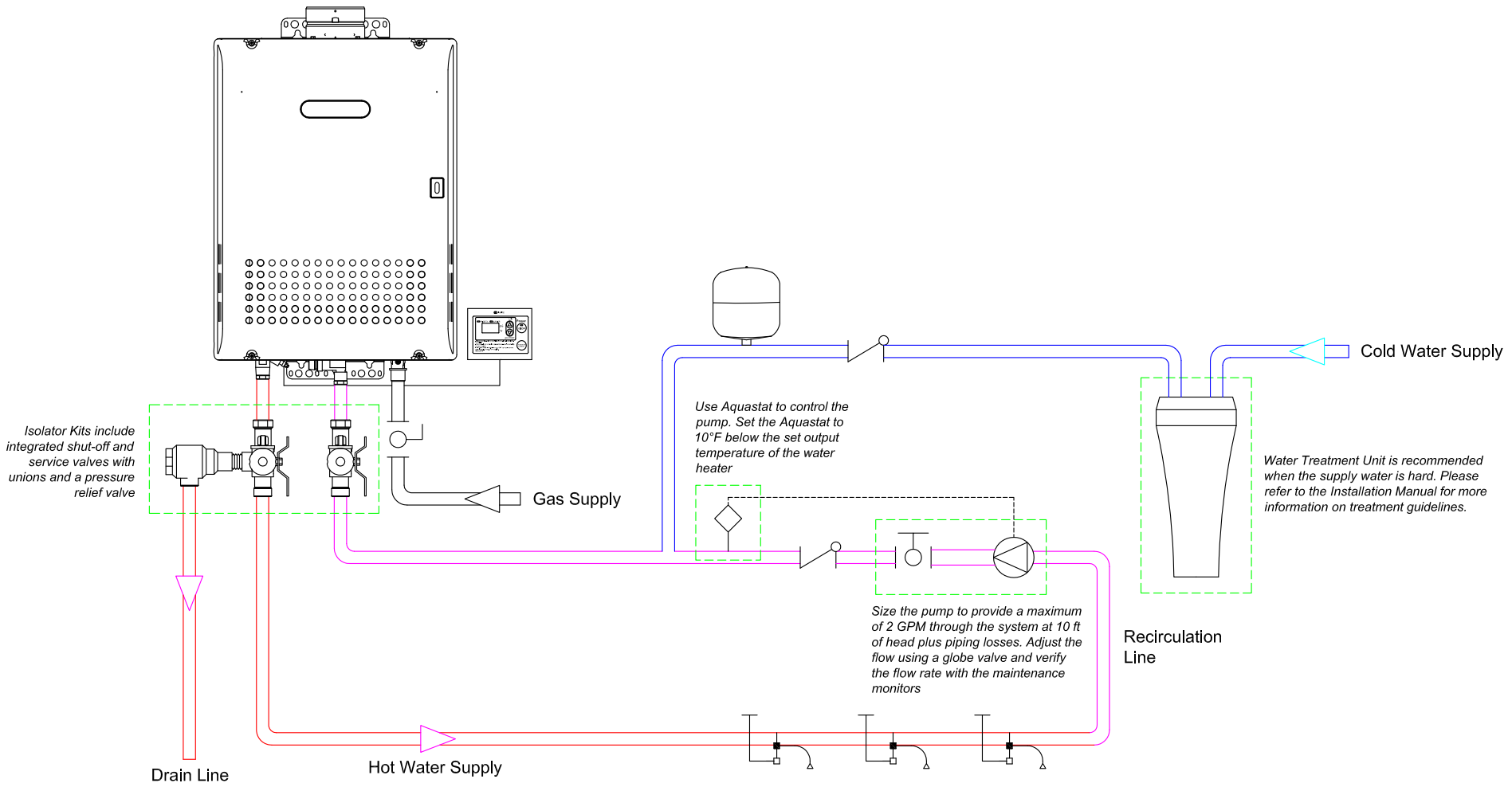

NORITZ
11160 Grace Avenue
Fountain Valley, California 92708
866-7NORITZ (866-766-7489)
www.noritz.com

MODEL

APPLICATION

Commercial
Recirculation

DRAWING NUMBER

DRAWING DATE

October 13, 2009

EQUIPMENT LIST

Item	Part Number	Qty
Noritz SV Model Tankless Water Heater	NC____-SV(-ASME)	1
Remote Controller	RC-7649M	1
Remote Controller Cord	RC-CORD10	1
Isolator Kit	IK-WV-___	1
Vent Cap (Outdoor Use Only)	VC-____	1
Pipe Cover	PC-__S	1
Expansion Tank	Field Supplied	1
Pump	Field Supplied	1
Aquastat	Field Supplied	1
Globe Valve	Field Supplied	1
Check Valve	Field Supplied	2

Note: This diagram is for reference only. Installation must comply with State and Local Code, all gas and water pipe must be sized correctly to specific length, according to accepted engineering methods or the UPC Code for Noritz Water Heaters to operate correctly.

- Shut-off Ball Valve
- Check Valve
- Union
- Pressure Relief Valve (Watts 174A, Zurn P3000BR, Cash Acme F-82)
- Aquastat (Honeywell Model #L6006A or L6006C)
- Pump
- Mixing Valve
- Thermal Expansion Tank