NORITZ
ALWAYS HOT

Owner's Guide and Installation Manual

Model N-132M

WARNING: If the information in this manual is not followed exactly, a fire or explosion may result causing property damage, personal injury or death.

- **Do not store or use gasoline or other flammable vapors and liquids in the vicinity of this or any other appliance.**

- **WHAT TO DO IF YOU SMELL GAS**
  - **Do not try to light any appliance.**
  - **Do not touch any electrical switch; do not use any phone in your building.**
  - **Immediately call your gas supplier from a neighbor's phone. Follow the gas supplier's instructions.**
  - **If you cannot reach your gas supplier, call the fire department.**

- **Installation and service must be performed by a qualified installer, service agency or the gas supplier.**

Low NOx Approved by SCAQMD

Thank you for purchasing this Noritz Gas Water Heater. Before using, please:
Read this manual completely for correct installation and operation instructions.
Completely fill out the warranty registration card (included separately) and mail the detachable portion to Noritz America Corporation.
Keep this manual (and the remainder of the warranty registration card) where it can be found whenever necessary.

NORITZ America Corporation

SAQ8975 ⑤
Rev. 10/05

SAQ8975 T

Contents

Contents 2
Owner's Guide
Important Safety Information 3
General Parts
Main Unit 8
Remote Controller 9
Initial Operation 11
Setting and Using the Water Heater 12
Flow Meter Alarm 14
Muting the Remote Controller 16
Preventing Damage from Freezing 17
Regular Maintenance 19
Troubleshooting 21
Follow-up Service 25
Specifications 26
External Outfitting 27
Combustion Unit and Gas Route 29
Hot-Water Feed Route 31
Electronic Control Unit 35
Electronic Control Unit, Remote Controller and Attached Set 36
Installation Manual 37
1. Included Accessories 38
2. Optional Accessories 38
3. Quick Connect Multi System Installation 39
4. Before Installation 40
5. Choosing Installation Site 40
6. Installation Clearances 42
7. Installation 45
8. Vent Pipe Installation 46
9. Gas Piping 49
10. Water Piping 51
11. Plumbing Applications 52
12. Electrical Wiring 53
13. Maintenance 57
14. Trial Operation 57
15. Dimensions and Wiring Diagram 58
16. Multi-System 60
Remote Controller Installation Guide 64

Important Safety Information-1

To prevent damage to property and injury to the user, the icons shown below will be used to warn of varying levels of danger.
Every indication is critical to the safe operation of the water heater and must be understood and observed.
Potential dangers from accidents during installation and use are divided into the following three categories. Closely observe these warnings; they are critical to your safety.

Icons warning of risk level

Danger	Denotes content that may result in instantaneous fire, serious injury and even death when ignored.
Warning	Denotes content that may result in fire, serious injury and even death when ignored.
Caution	Denotes content that may result in bodily injury and physical damage when ignored.
Remarks	The content following this icon is necessary to understand for safe and easy use of this water heater.

Other icons

Electric Shock.	High Temperature.	Be sure to do.	Ground.	
Prohibited	No flame.	Don't touch.	Don't disassemble the equipment.	Don't touch with a wet hand.

Danger

If you detect a gas leak:

1. **Do not try to light any appliance**
2. **Do not touch any electrical switch; do not use any phone in your building.**
3. **Immediately call your gas supplier from a neighbor's phone. Follow the gas supplier's instructions.**
4. **If you cannot reach your gas supplier, call the fire department.**

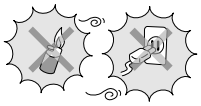

Do not use the water heater if the exhaust pipe is displaced, has holes, or is corroded.

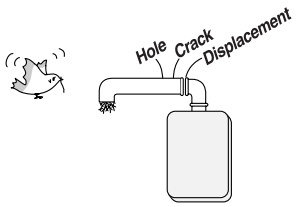

Important Safety Information-2

⚠ Warning

If you detect abnormal combustion or abnormal odors, or during an earthquake, tornado or fire:

1. **Turn off the hot water supply**
2. **Turn off the power to the water heater**
3. **Turn off gas and water at the main**
4. **Consult the nearest Noritz agent**

Check the temperature of the running hot water before entering the shower.

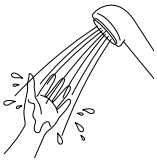

Check the temperature before stepping into the bath tub.

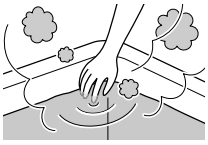

Do not turn off the water heater or change the water temperature while someone is using.

Be sure the gas/power supplied matches the gas on the rating plate.

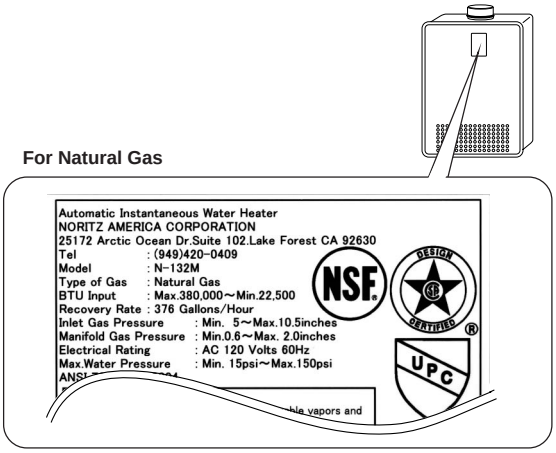

Do not allow small children to play unsupervised in the bathroom. Do not allow small children to bathe unsupervised.

Consult the nearest Noritz agent if the water heater location needs to be changed.

Contact a qualified service technician for any necessary repairs, service or maintenance.

Contact Noritz before using with a solar pre-heater.

⚠Warning

Do not place combustibles such as laundry, newspapers, oils etc. near the heater or the exhaust vent terminal.

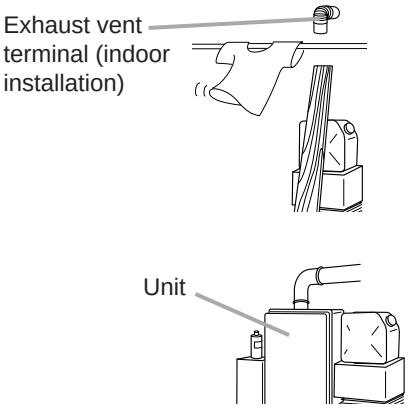

Do not use combustible chemicals such as oil, gasoline, benzene etc. in the vicinity of the heater or the exhaust vent terminal.

[When installing indoors] Check the air supply vent for dust or obstructions.

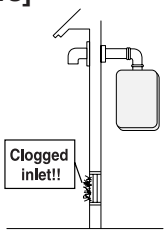

Leave the proper clearance between the water heater and nearby objects (trees, timber, boxes with flammable materials etc.).

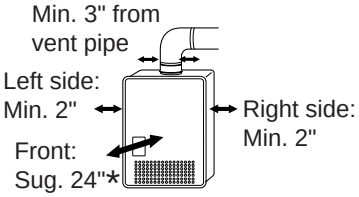

* Indicates suggested clearances for maintenance.

Do not place or use a spray can near the heater or the exhaust vent terminal.

Important Safety Information-3

⚠ Caution

Be sure to electrically ground the unit.

Do not touch the power cord with wet hands.

Keep power cord free of dust.

Do not use a broken or modified power cord. Do not bind, bend or stretch power cords.
Do not scratch, modify, or subject them to impact or force.

Do not use the water heater for other than hot water supply, shower and bath.

Do not touch the exhaust vent pipe during or immediately after operation of the water heater.

Do not use hair spray or spray detergent in the vicinity of the heater.

If this unit will be installed in a salon or other location where hair spray or aerosols will be used, locate the unit in a seperate area that is supplied with fresh air from outdoors.

Do not install in locations where excessive dust or debris will be in the air.

Remark

Do not drink water that has been inside the unit for an extended period of time. Do not drink the first use of hot water from the unit in the morning.

Clean the filter on the water inlet as frequently as required by the quality of your local water.

Keep the area around the unit clean.

If boxes, weeds, cobwebs, cockroaches etc. are in the vicinity of the unit, damage or fire can result.

Do not install the equipment where the exhaust will blow on walls or windows.

Treat hard, acidic or otherwise impure supply water with approved methods to ensure full warranty coverage.

Problems resulting from scale formation are not covered by the warranty.

Check ignition during use and extinction after use.

Do not use parts other than those specified for this equipment.

This unit is only approved for installation up to 4500 ft. above sea level.

For installations at higher elevations, contact Noritz America for Instructions.

Do not disassemble the remote controller.

Do not use benzene, oil or fat detergents to clean the remote controller.

This may cause deformation.

Do not get the remote controller wet.

Although it is water resistant, too much water can cause damage.

Do not splash water on the remote controller. Do not expose the remote controller to steam.

Do not locate the remote controller near stoves or ovens, this may cause damage or failure.

Preventing damage from freezing (☞p.17)

Damage can occur from frozen water within the device and pipes even in warm environments.
Be sure to read below for appropriate measures.
Repairs for damage caused by freezing are not covered by the warranty.

Take necessary measures to prevent freezing of water and leakage of gas when leaving the unit unused for long periods of time. (☞p.18)

If it is snowing, check the air inlet, exhaust gas vent and exhaust vent terminal for blockage.

General Parts

Main Unit

Indoor/Outdoor Wall Mounted, Power Vented Model

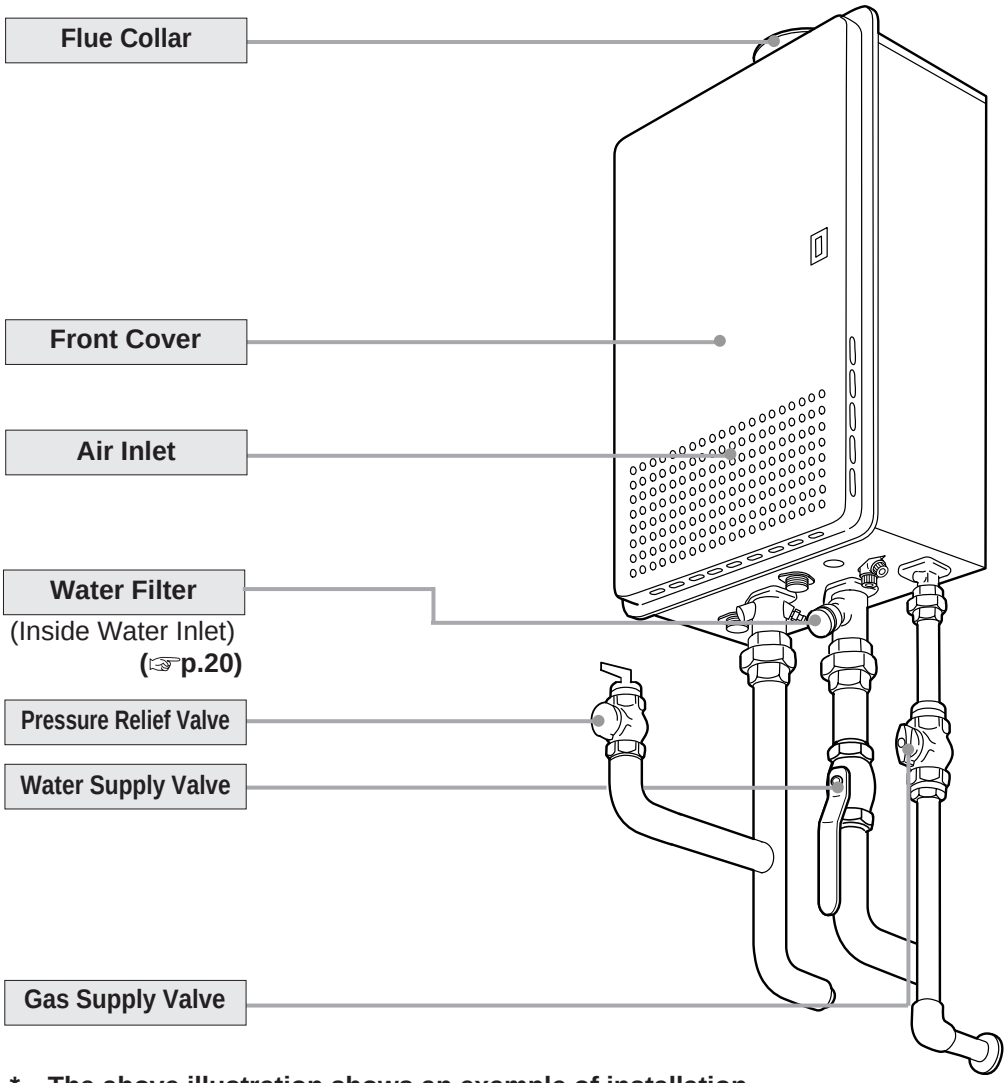

* **The above illustration shows an example of installation.**
The exact installation configuration may be slightly different.

Remote Controller (RC-7646M-2)

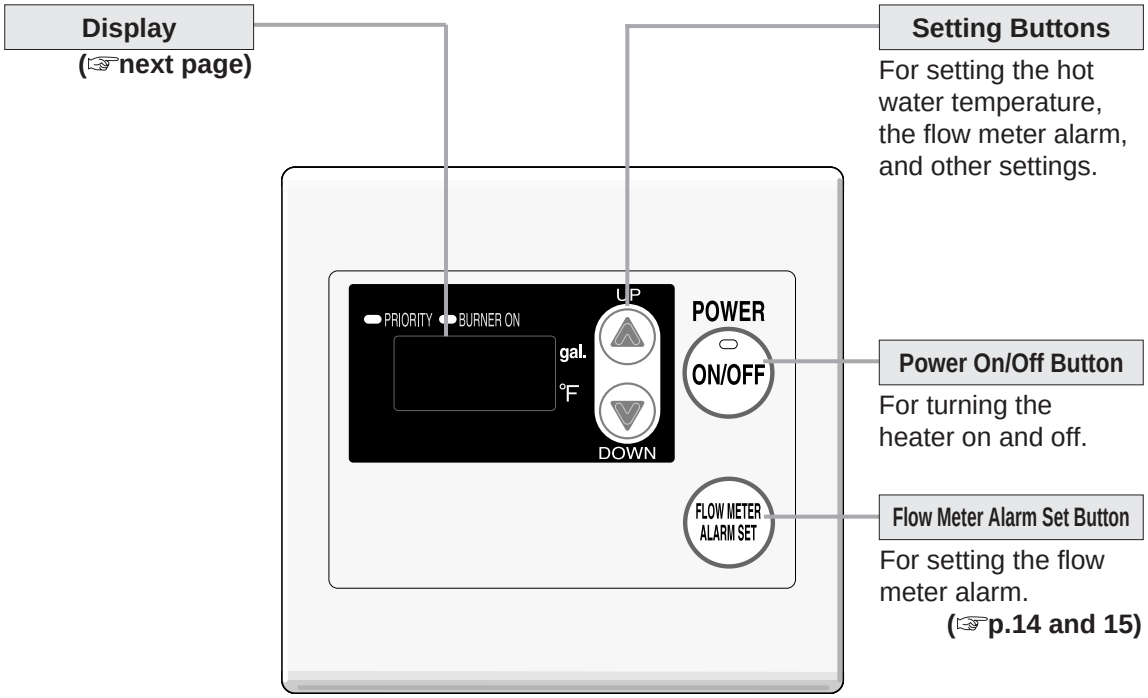

* Before use, remove the protective sheet from the remote controller surface.
* The unit has been shipped from the factory with the remote controlset at 110°F.

Display

The illustration below shows the remote controller display. What is actually displayed depends on how the water heater is set.

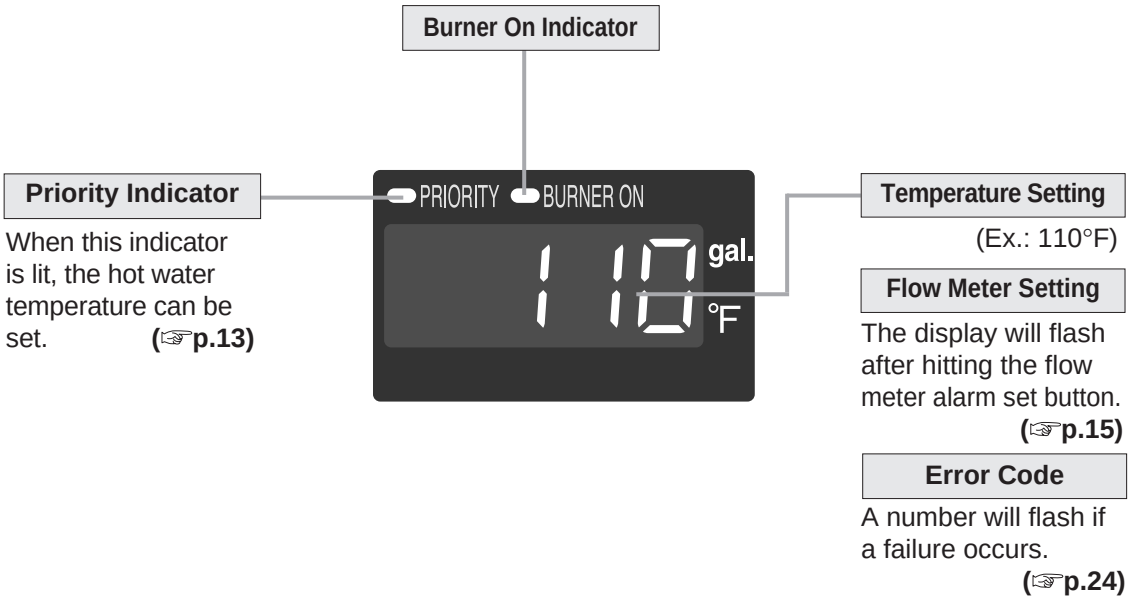

Initial Operation

Before the first use of your water heater, make the following preparations.

Follow steps **1 through 4**.

1 Open the water supply valve.

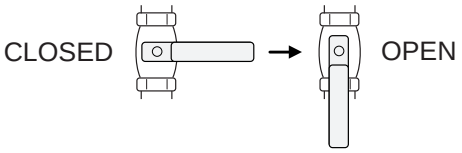

2 Open a hot water fixture to confirm that water is available, and then close the fixture again.

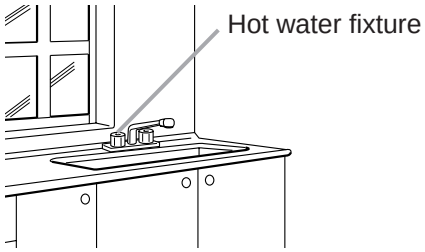

3 Open the gas supply valve.

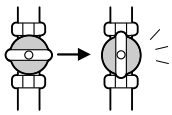

4 Turn on the power.

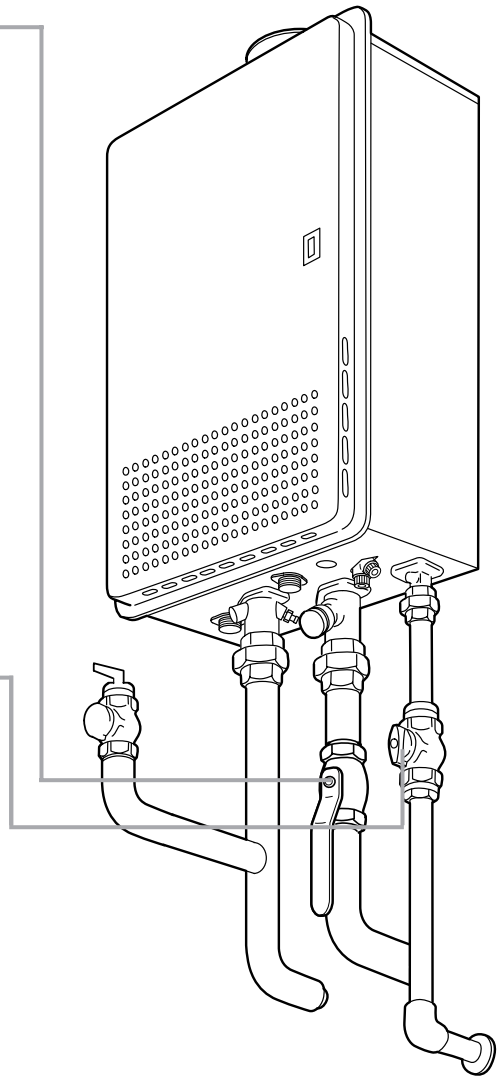

Setting and Using the Water Heater

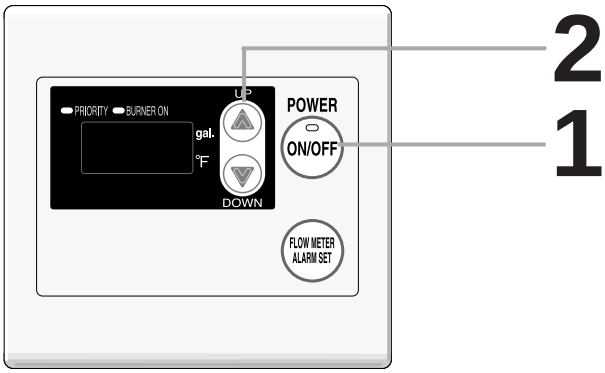

(Starting with the Power Off)

1 Press the Power On/Off Button.

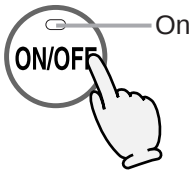

The temperature will be displayed on the remote control thermostat.

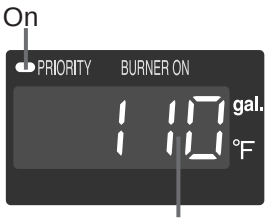

Previous set temperature (Ex.: 110°F)

Caution

To prevent scalding:

Temperatures above 125 °F can scald.

- Check the water temperature by hand before bathing or showering.
- When setting the unit to 125°F or higher, the temperature display will flash for 10 seconds as a high temperature warning.
- Take caution when using the unit again after setting to 125°F or higher. Always check the set temperature before use.
- Do not allow anyone to change the water temperature while hot water is running.

Remote Controller Display

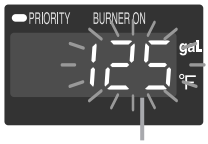

Flashes for 10 sec

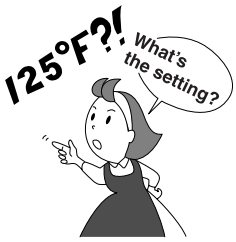

2 Set temperature. (Always check the temperature setting before use.)

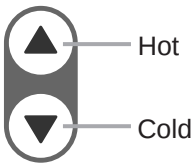

Check the indicator lights.

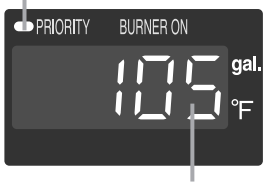

Water temperature

3 Turn on hot water.

On

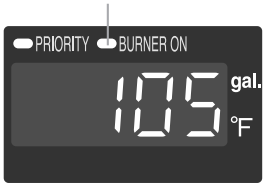

4 Turn off the hot water.

Off

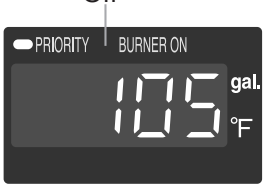

(°F: The temperature settings below are examples. The temperature setting necessary depends on the usage, the length of piping and the time of year.)

100	105	110	115	120	125	130	135	140	145	150	160	170	180
Washing dishes, etc.	Shower, hot water supply, etc.				High temperature								

*Initial factory setting is 110°F

If fixtures incorporate mixing valves, set the temperature higher than usual.

* For most residential applications, the recommended setting temperature is 120°F or less. For applications that occasionally require a higher temperature setting, locate the remote controller in a convenient location (☞p.64).
* Consult local codes for minimum operating temperatures.

Flow Meter Alarm

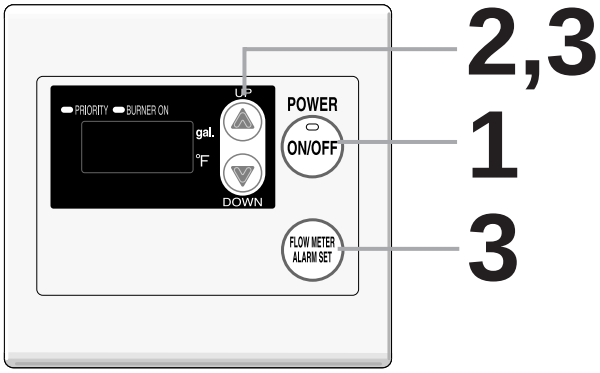

(Starting with the power off)

Preparation

1. Plug the bath drain.

1 Press the Power On/Off Button

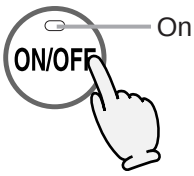

The temperature will be displayed on the remote control thermostat.

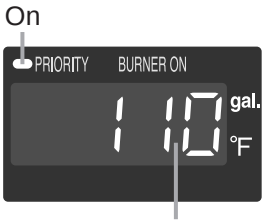

Previous set temperature (example:110°F)

2 Set temperature. (Always check temperature setting before use.)

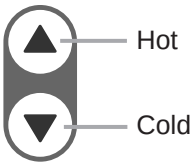

Check the indicator lights.

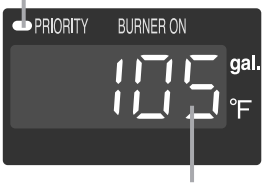

Water temperature

An alarm will sound for ten seconds when the flow reaches the set level.

The water will continue to run unless it is manually turned off.

Water Temperature

(°F: The temperatures settings below are only examples. The temperature setting necessary will depend on the usage, the length of piping and the time of year.)

100	105	110	115	120
Warm	Warmer		Hot	

* Initial factory setting: 110°F

To set the flow meter alarm:

3 Adjust flow meter alarm setting.

Press the flow meter alarm set button (the setting will flash on the display) and adjust with the setting buttons.

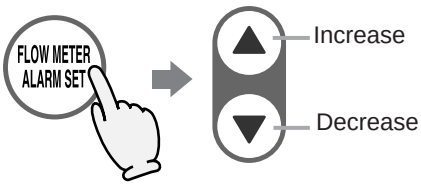

Choose the flow meter alarm setting from the following options: 10 - 60 (In 5 gallon intervals), 70 - 100 (In 10 gallon intervals), or 990 gallons.

Note: The alarm will not sound if it is set for 990 gal.

Flow meter setting will be flashing (ex. 45 gal.)

* The level can only be adjusted while the indicator is flashing.

* After ten seconds, the remote will again display the temperature.

4 Turn on hot water.

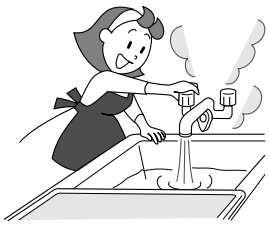

On

5 Turn off the hot water when the alarm sounds.

The alarm will sound when the set level has been reached. Stop the water.

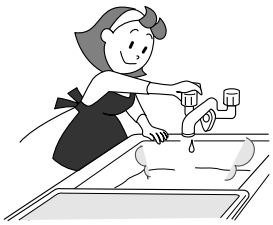

Note: The alarm will not sound if it is set for 990 gal.

Off

If the flow meter alarm is being used to indicate when a tub is full:

- If any hot water is being used besides what is going into the tub, the alarm will sound before the tub is full.
- If there was water in the tub before the fill began, or if the water is not shut off manually when the alarm sounds, the tub may overflow.
- If there was water in the tub before the fill began, the temperature in the tub after it is full may be different from the temperature setting.

Muting the Remote Controller

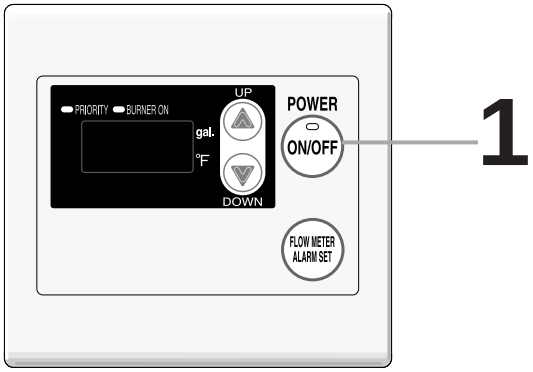

The remote controller will emit a sound when any button is pushed. This sound can be muted if it is desired.

* Initial factory setting is with sound.

1 With the remote controller off, hold the Power On/Off Button for five seconds.

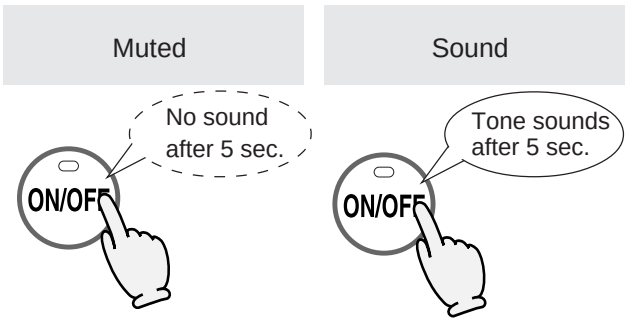

The flow meter alarm cannot be muted.

Preventing Damage from Freezing-1

Remarks

* Damage can occur from frozen water within the device and pipes even in warm environments. Be sure to read below for appropriate measures.
* Repairs for damage caused by freezing are not covered by the warranty.

Freezing is prevented within the device automatically by the freeze-prevention heater

Freezing cannot be prevented when the power is disconnected.Do not remove the power plug from the wall outlet.

(Freezing will be prevented regardless of whether the operation switch is ON or OFF.)

* The freeze prevention heaters will not prevent the plumbing external to the unit from freezing. Protect this plumbing with insulation, heat tape or electric heaters, solenoids, or pipe covers. If there remains a freezing danger, contact the nearest Noritz agent.

Take the measures below for extremely cold temperatures*.
(outside temperature including wind chill factor less than 5°F)

This method can protect not only to the heater, but also to the water supply, water piping and mixing valves.

1. Turn the unit on with the Power Button on the Remote Controller.
2. Close the gas supply valve.
3. Open a hot water fixture and let it run for approx. 1 minute, and then check that the number 11 is flashing on the remote controller display.
   * If multiple units are being used, drain one minute for each unit.
   * It is possible that a different number may be displayed on the remote controller, but as long as it is flashing, you may continue.
4. Partially close the hot water fixture, but keep a small amount of hot water running (.1 gal./minute or about .2” thick).
   * If there is a mixing valve, set it to the highest level.
   * When linking multiple units, discharge water equivalent to .1 gal./minute per unit.
5. The flow may become unstable from time to time. Check the flow 30 minutes later.

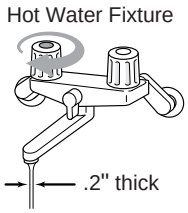

* Remember to set mixing valves and fixtures to their original levels before using the unit again to prevent scalding.
* If there is still a chance that the unit will freeze, drain the unit as on the next page.

If water will not flow because it is frozen:

1. Close the gas and water valves.
2. Turn off the power button.
3. Open the water supply valve from time to time to check whether water is running.
4. When the water is flowing again, check for water leaks from the equipment and piping before using.

If the heater or the piping is frozen, do not use the heater or it may get damaged.

Preventing Damage from Freezing-2

If the water heater will not be used for a long period of time, Drain the water.

Drain the water as follows:

Caution

High Temperature

To avoid burns, wait until the equipment cools down before draining the water. The appliance will remain hot after it is turned off.

Drain water into a bucket to prevent water damage.

1. Close the gas valve.

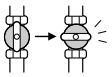

2. (1) Turn the power on.

   (2) Turn and leave open the hot water fixture for more than 1 minute and close.
   *If multiple units are being used, drain one minute for each unit.

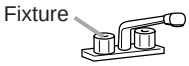

   * An 11 Error Code may appear on the remote control.
   This is not a malfunction of the unit. Do not turn Power ON/OFF Button OFF.

3. Close the water supply valve, disconnect the electrical power supplied to the unit.

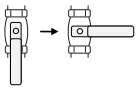

   Do not touch with wet hands.

4. Fully open all hot water fixtures.

5. Open all drain plugs and drain the water out of the unit.

6. When the water is completely drained, replace all drain plugs and close the hot water fixtures.

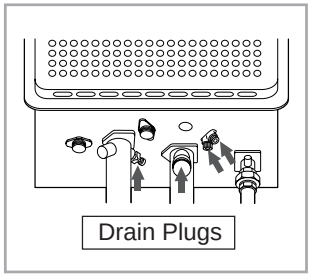

Turning the Unit Back On

1. Check that all drain plugs are inserted.
2. Check that all hot water fixtures are closed.
3. Follow the procedure on p.11 “Initial operation”, steps 1 through 4.

Regular Maintenance-1

Periodic Inspection

Caution

High Temperature

To avoid burns, wait until the equipment cools down before draining the water. The appliance will remain hot after it is turned off.

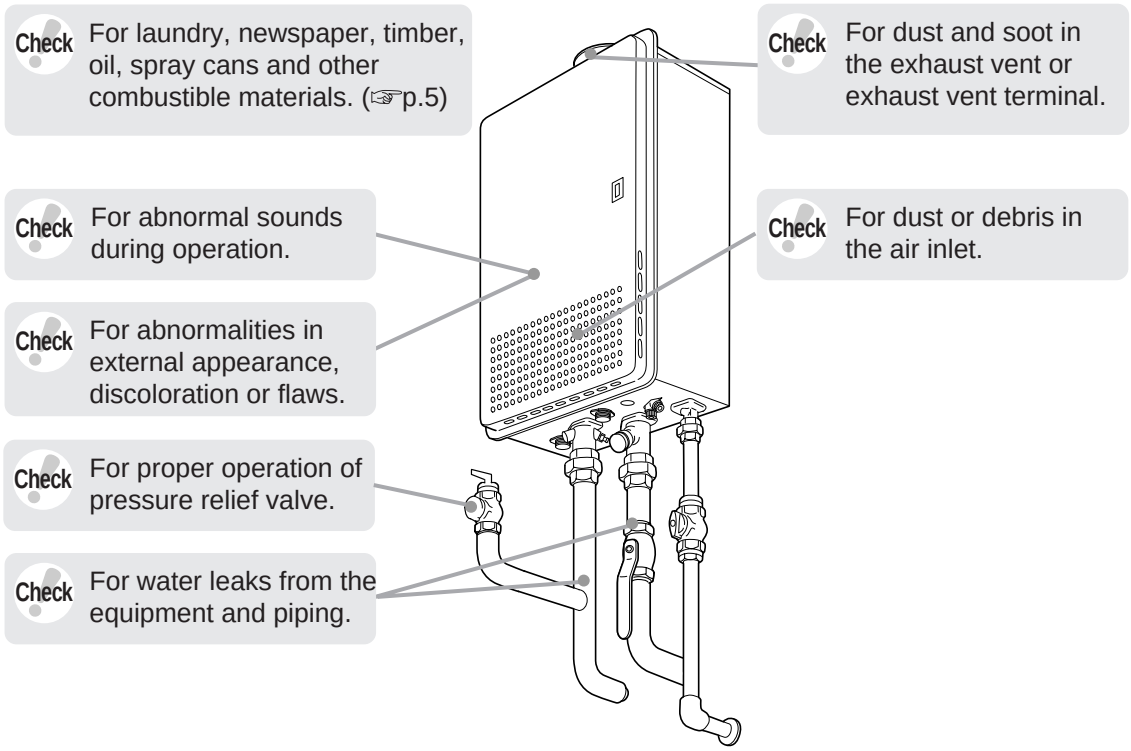

Periodic Maintenance

Equipment

Wipe the outside surface with a wet cloth, then dry the surface. Use a neutral detergent to clean any stains.

Remote Controller

Wipe the surface with a wet cloth.

- Do not use benzene, oil or fatty detergents to clean the remote controller; deformation may occur.
- The remote controller is water resistant but not water proof. Keep it is dry as possible.

Regular Maintenance-2

Periodic Maintenance

Water Filter

If the water filter is covered with debris, the hot water may not run smoothly, or the unit may put out cold water. Check and clean the filter as explained below.

* **To avoid burns, wait until the equipment cools down before draining the water. The appliance will remain hot after it is turned off.**

1. Close the water supply valve.
2. Open all hot water fixtures.
3. With a bucket ready, remove the inlet and outlet drain plugs (about 0.6 gal. will drain out)
4. Take the water filter out of the inlet. (See illustration to right).
5. Clean the filter with a brush under running water.
6. Replace the filter and close the drain plugs. (Take care not to lose the packing.)
7. Close all hot water fixtures.
8. Open the water supply valve and check that water does not leak from the drain plugs or filter.

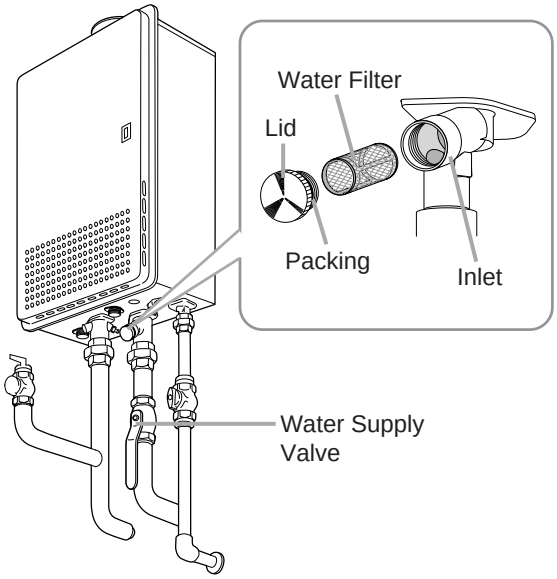

Optional Maintenance

Water Heater Service Valves (IK-WV-3)

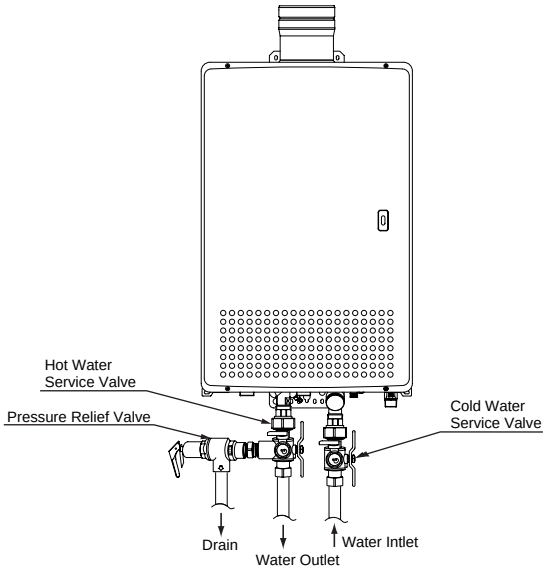

* Isolator valve kits may be purchased as an accessory from Noritz (Part #IK-WV-3). They allow for one man full diagnostic testing and easy flushing of the system.

* The kit includes two full port isolation valves and a pressure relief valve for the hot side. Contact Noritz for more information.

Troubleshooting-1

Initial Operation

Unit does not attempt to ignite when water is running.	• Is water running? • Check for reversed plumbing or crossed pipes. • Check water filter. (☞p.20)
Unit attempts to ignite but fails	• Reset unit and try again. There may be air in the gas line. • Have a professional check the gas supply pressure.

Temperature

Hot water is not available when a fixture is opened.	• Are the gas and water supply valves fully open? • Is the water supply cut off? • Is the hot water fixture sufficiently open? • Is the gas being cut off by the gas meter ? (Can other gas devices such as stoves be used?) • (For LP) Is there enough gas in the tank? (Can other gas devices such as stoves be used?) • Is the water filter clogged? (☞p.20) • Is the power button turned on?
No water is available when a fixture is opened.	• Is the water supply cut off? • Is the heater frozen?
The hot water is not the correct temperature.	• Is the hot water fixture sufficiently open?
Water takes time to become hot when turning the hot water fixture.	• Have you allowed enough time for the cold water in the pipes to drain out?
The water is too hot.	• Are the gas and water supply valves fully open? • Is the water temperature setting appropriate? (☞p.12 and p.13) • If the water supply temperature is high, it is possible for the temperature to be higher than the temperature set on the remote controller. • If only a small amount of hot water is demanded, it is possible for the temperature to be higher than the temperature set on the remote controller. • If the supply water goes through a solar pre-heating system, it is possible for the temperature to be higher than the temperature set on the remote controller.

Troubleshooting-2

Temperature

The water is not hot enough.	• Are the gas and water supply valves fully open? • Is the water temperature setting appropriate? (☞p.12 and p.13) • If the amount of hot water required is very high, it is possible for the temperature to be lower than the temperature set on the remote controller. Decrease the amount of water passing through the unit and the temperature should stabilize.
The water is cold when only a single fixture is open.	• The unit will not heat the water if the flow rate is less than 0.7 gallons per minute. Open the fixture more or open other fixtures so that a greater flow passes through the unit, and the unit should begin heating again.
Fluctuations in hot water temperatures.	• Set water temperature at 115°F to 120°F. This will allow you to use a higher flow of hot water thus meeting the minimum flow requirement of 0.7 gpm. • Clean the water filter of any debris (☞ p. 20)

Amount of Hot Water

The amount of hot water at a certain fixture is not constant.	• When hot water is demanded at other fixtures, the amount available may be reduced. The maximum flow available from this unit is 13.2 GPM at a 45°F temp. rise. • Pressure fluctuations and other plumbing conditions can cause the temperature and pressure at a fixture to be unstable, but it should stabilize after a short time. • There are some types of hot water taps that discharges large volumes of hot water initially, but stabilize after time. • To keep the temperature stable, the heater limits the amount of water that can flow through it to a small amount initially, but the amount increases over time.
The amount of hot water in the tub is less/more than the set amount.	• When hot water is used for other fixtures while filling the bath tub, the tub will not fill as much. • If there is water in the tub already, or when filling is stopped and resumed, the tub will fill more.
The flow meter alarm does not sound even when filled to the set amount.	• The flow meter alarm is set to sound when hot water is continuously discharged for the set volume of water. If mixing valves are used, or if cold water is mixed with hot water at the fixture, the tub will fill more than the setting of the flow meter alarm.
Amount of hot water available has decreased over time.	• Is the water filter clogged? (☞p.20)

Remote Controller

The light on the power button does not come on.	• Has there been a power failure? • Is the power connected properly?
The water temperature changes after a power failure or when the power is disconnected.	• The temperature setting and the flow meter alarm setting may both need to be reset after a power outage.

Sounds

The fan can be heard after operation is stopped. A motor can be heard when turning the unit ON or OFF, when opening or closing a fixture, or after the unit has been running for a while.	• These noises indicate the proper operation of devices which are designed to let the unit reignite more quickly, and ensure the water temperature is stable.
The fan can be heard when it is very cold outside.	• The fan may run to prevent freezing.

Other

The heater stops burning during operation.	• Are the gas and water supply valves fully open? • Is the water supply cut off? • Is the hot water fixture sufficiently open? • Is the gas being cut off by the gas meter? (Can other gas devices such as stoves be used?) • (For LP) Is there enough gas in the tank? (Can other gas devices such as stoves be used?)
White smoke comes out of the exhaust vent on a cold day.	• This is normal. The white smoke is actually steam.
The hot water is turbid.	• This is harmless. Small air bubbles appear as the water is heated and depressurized rapidly to atmospheric pressure.
Water leaks from the drain plugs on the outlet.	• When the unit is under very high pressure, water will leak from the drain plugs as a safety so that the unit is not damaged by the high pressure.

Troubleshooting-3

Other

The water appears blue or The bath tub/wash-basin has turned blue	• This can be caused by a reaction of copper ions in the water with fat particles (furring). This is not a health risk, and the discloration of the tub or basin can be cleaned.

Check for an Error Code

If there is a problem with the unit, a numerical error code will flash on the remote controller.
If this occurs, take appropriate measures as listed below.

When an error code appears, the display and the operation light will flash together.

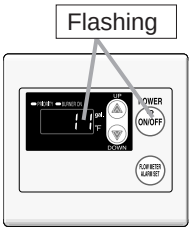

Remote Controller

Error Code	Cause	Action
11	Ignition error	Check whether the gas valve is open. Press the power button to turn the unit off, open a hot water fixture, and turn the unit back on. If the flashing number doesn't return the problem is solved.
21	Insufficient air supply, exhaust blockage	(If the alarm doesn't sound) • Open a door or window to let air in. • Close the hot water fixtures. • Press the power button to turn the unit off. If the error code does not return when the unit is turned back on, the unit was not getting enough air. • If there is a range hood or kitchen fan in the room, turn it down.
90	Abnormal combustion, low gas supply pressure	Have a professional check the gas supply pressure. Contact the nearest Noritz agent.
99	Abnormal combustion	Contact the nearest Noritz agent.

Contact our sales agent if:

- Any other error code appears.
- An error code is indicated again after the above actions were followed.
- There are any other questions.

Follow-up Service

Requesting Service

First follow the instructions in the troubleshooting section (p.21 to p.24).
If the error is not corrected, contact our sales agent.

We will need to know:
The Model ..... (check the rating plate)
*See p.4 for the location of the label
Date of purchase ..... (see the warranty)
Details of problem ... (flashing error codes, etc., in much detail as possible)
Your name, address, and telephone number
Desired date of visit

* A request for service may be rejected if the water heater is installed in a location where working on the unit may be dangerous. Contact a plumber.

Warranty

A warranty registration card is included separately.
Be sure that the plumber, date of purchase and other necessary items are filled in.
Read the content carefully, and keep the warranty card in a safe place.

For repairs after the warranty period, there will be a charge on any service, and service will only be performed if the unit is deemed repairable.

Period of Time for Stocking Repair Parts

Noritz will stock repair and maintenance parts for this unit for a minimum of seven years after production has ceased.

Reinstallation

If you want to reinstall the appliance at a different location, confirm that the gas and power supply indicated on the rating plate are available at the new location. If you are not sure, consult the local utility company.

If you move to a region that uses a different type of gas, conversion and adjustment of the appliance will be necessary. This work must be performed by Noritz and will be charged for even during the warranty period.

Specifications

- Specifications may be changed without prior notice.
- The capacity may differ slightly, depending on the water pressure, water supply, piping conditions, and water temperature.

Specifications

Item		Specification
Model Name		N-132M
Type	Installation Air Supply/Exhaust	Indoor/ Outdoor, Wall Hanging Power Vented
Ignition		Direct Ignition
Operating Pressure		15-150 PSI
Minimum Flow Rate		0.7 GPM
Dimensions		29.5"(Height) x 18.9"(Width) x 11.8"(Depth)
Weight		105 lbs.
Water Holding Capacity		0.6 Gallon
Connection Sizes	Water Inlet	1"
	Hot Water Outlet	1"
	Gas Inlet	3/4"
Power Supply	Supply	120 VAC (60Hz)
	Consumption	NG:137W, LP:142W, Freeze Prevention 371W
Materials	Casing	Zincified Steel Plate/Polyester Coating
	Flue Collar	Stainless Steel
	Heat Exchanger	Copper Sheeting, Copper Tubing
Safety Devices		Flame Rod, Thermal Fuse, Pressure Relief Valve, Back Pressure Switch, Lightning Protection Device (ZNR), Electric Leakage Prevention Device (GFCI), Overheat Prevention Device, Freezing Prevention Device, Fan Rotation Detector
Accessories		Remote Controller, Remote Controller Cord, Anchoring Screws

Performance

Item		Maximum Performance	Minimum Performance
Gas Consumption	NG	380,000 btuh	22,500 btuh
	LP	380,000 btuh	22,500 btuh
Maximum Hot Water Capacity	45°F Rise	13.2 Gal./min.	
Capacity Range		0.7 -13.2 Gal./min.	
Temperature Settings		100-150°F (In 5°F intervals), 160, 170, 180°F (In 10°F intervals) (14 Options)	
Default Temperature Options		120,130,140,180°F(Original is 120°F)	

External outfitting

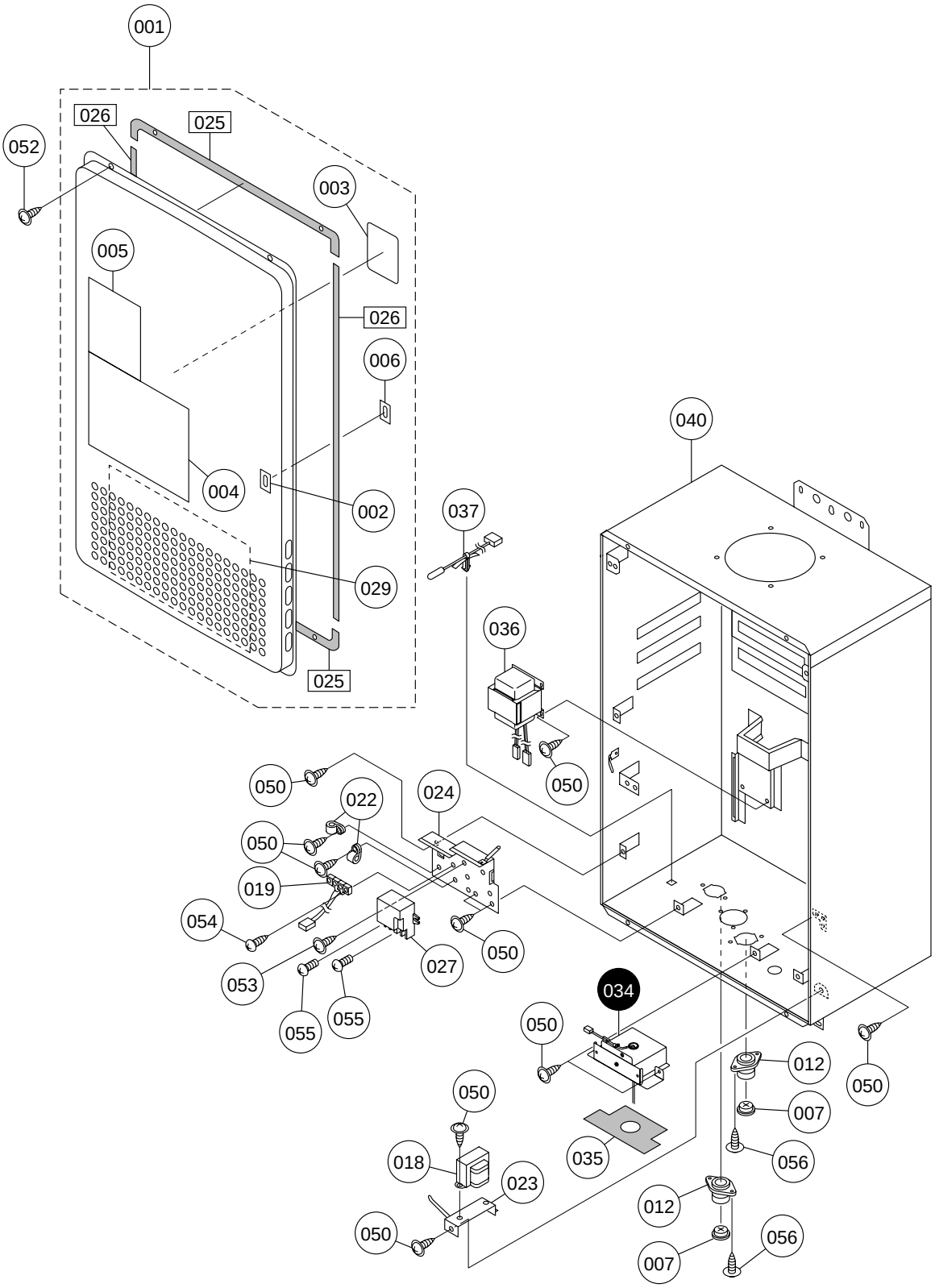

External outfitting

Part Nos.	Part Names	Order Nos.	Q'ty/unit
001	N-132M Front set-AS	SBP7387	1
002	Lamp seal plate DEC	DECK008	1
003	Plug insulation sheet CRU	CRUK002	1
004	Caution label 1 EAU	EAUK003	1
005	Caution label 2 EAU	EAUK004	1
006	Raintight seal plate BUB	BUBK004	1
007	Grommet CXP	CXPA026	2
012	Wiring coupling BXK	BXKA022	2
018	Reactor DMA	DMAJ015	1
019	Conduit 90-2 CCP	CCPJ028	1
022	Nylon clamp HP-4N (NK-4N)	7287909	2
023	Mounting plate for reactor DMA	DMAA019	1
024	Mounting plate for current leakage safety device DUV	DUVA016	1
025	Front packing H CMN	CMNL013	2
026	Front packing V CMN	CMNL014	2
027	Current leakage safety device DTJ	DTJJ015	1
029	Connection diagram label EJH	EJHK002	1
034	Junction box set EHU	EHUA008	1
035	Junction box packing EHU	EHUL002	1
036	Transformer EAU	EAUJ011	1
037	Air themistor BWC	BWCH003	1
040	Case EJH	EJHA001	1
050	Cross recessed round-head collar N-tapping screw 4X8		
052	Cross recessed truss type3 EVERTIGHT tapping screw with PW 4X12		
053	Cross recessed round-head collar N-tapping screw 4X12		
054	Cross recessed round-head N-tapping screw 4X12		
055	Cross recessed bind machine screw M3.5X6		
056	Cross recessed round-head collar type3 EVERTIGHT tapping screw 4X12		

Combustion unit and gas route

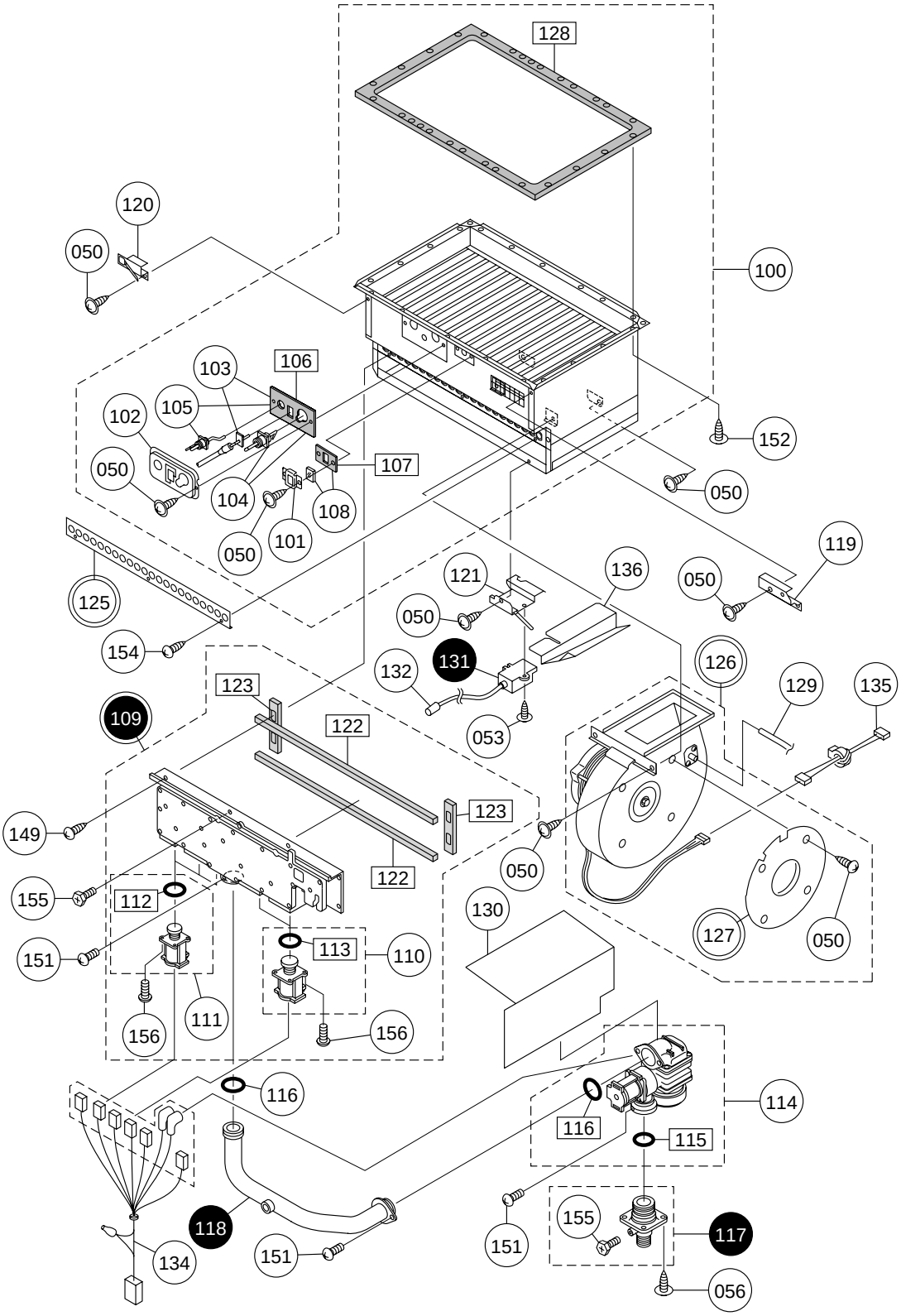

Combustion unit and gas route

Part Nos.	Part Names	Order Nos.	Q'ty/unit
100	Combustion tube set DUV SET-V	SBC7549	1
101	Window glass holding plate AAA	AAAC027	1
102	Plug fixing plate(for N) DLK	DLKC009	1
103	Burner sensor DLK SET-V	SBA7505	1
104	Ignition plug & packing DLK SET-V	SBN7223	1
105	Flame rod DLK SET-V	SBA7506	1
106	Plug packing(for N) DLK	DLKL012	1
107	Window glass packing CRU	CRUL005	1
108	Window glassA packing CRU SET-V	SAQ7345	1
109	Manifold set T17 EJH SET-AS	SBP7392	1<LPG>
	Manifold set T27 EJH SET-AS	SBP7393	1<NGA>
110	Solenoid S24L CRU-1 SET-V	SBB7173	1
111	Solenoid S16 CRU SET-V	SBB7213	1
112	O-ring JASO 2030 type 1	SAA6044	3
113	O-ring JASO 2037 type 1A	SAA6476	2
114	Gas mech. S24DQ CRP SET-V	SAQ7708	1
115	O-ring JASO 2028A	8590109	1
116	O-ring P25.5	SAB1512	2
117	Gas fitting 20A set EJH	EJHE001	1
118	Gas pipe set EAU	EAUE007	1
119	Fixing plate for burner case,right DMA	DMAA021	1
120	Fixing plate for burner case,left DMA	DMAA022	1
121	Mounting plate for igniter DMA	DMAA016	1
122	Manifold seal packing L DMA	DMAL018	2
123	Manifold seal packing S DMA	DMAL019	2
125	Main damper 8 DMA	DMAC032	1<LPG>
	Main damper 9 DMA	DMAC033	1<NGA>
126	Fan motor SET o56 DMB	DMBF025	1<LPG>
	Fan motor SET o52 EAU	EAUF002	1<NGA>
127	Bell-mouse o56 CKB	CKBF021	1<LPG>
	Bell-mouse o52 CKB	CKBF023	1<NGA>
128	Suction air joint packing DMA	DMAL001	1
129	Sillicone tube ID6XT2X650 BVH	BVHF007	1
130	Gas mech. Cover DMA	DMAA025	1
131	Igniter CRP	CRPJ002	1
132	High-voltage cord 470	SAC1229	1
134	Conduit R10 EAU	EAUJ020	1
135	Conduit 27 DMA	DMAJ013	1
136	Waterproof cover EHA	EHAA010	1
149	Cross recessed round-head type3 EVERTIGHT tapping screw 5X16		
151	Cross recessed round-head machine screw M4X8 ,black		
152	Cross recessed round-head collar N-tapping screw 4X10		
154	Cross recessed round-head N-tapping screw 4X8		
155	Cross recessed hexagon head machine screw M4X8		
156	Cross recessed round-head SPAKmachine screw with guide M4X12		

Hot-water feed route 1

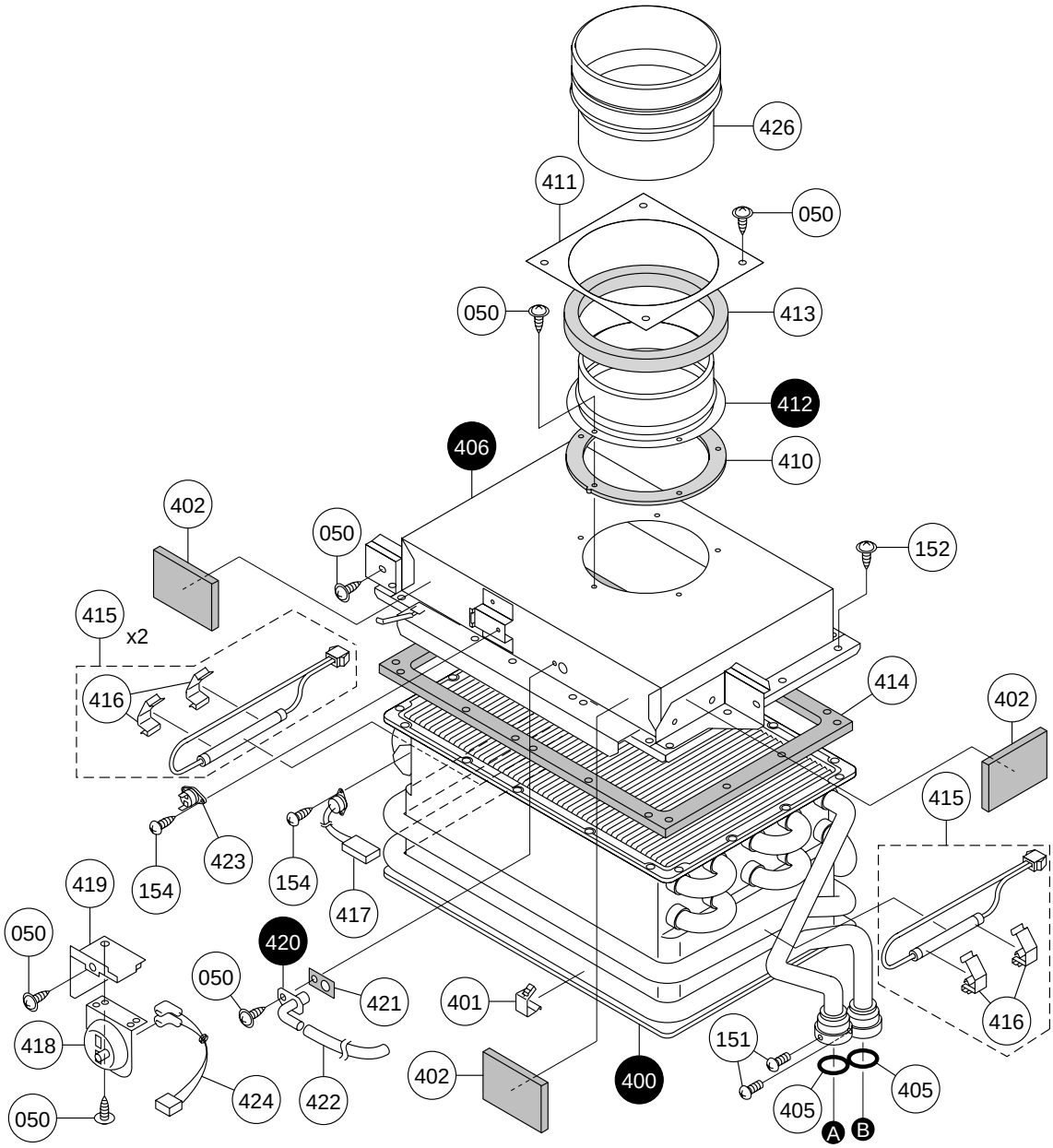

Thermal Fuse Connection procedure

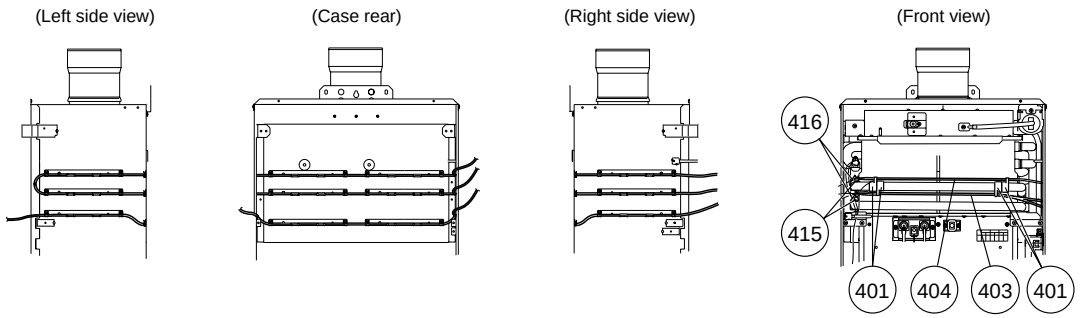

Hot-water feed route 2

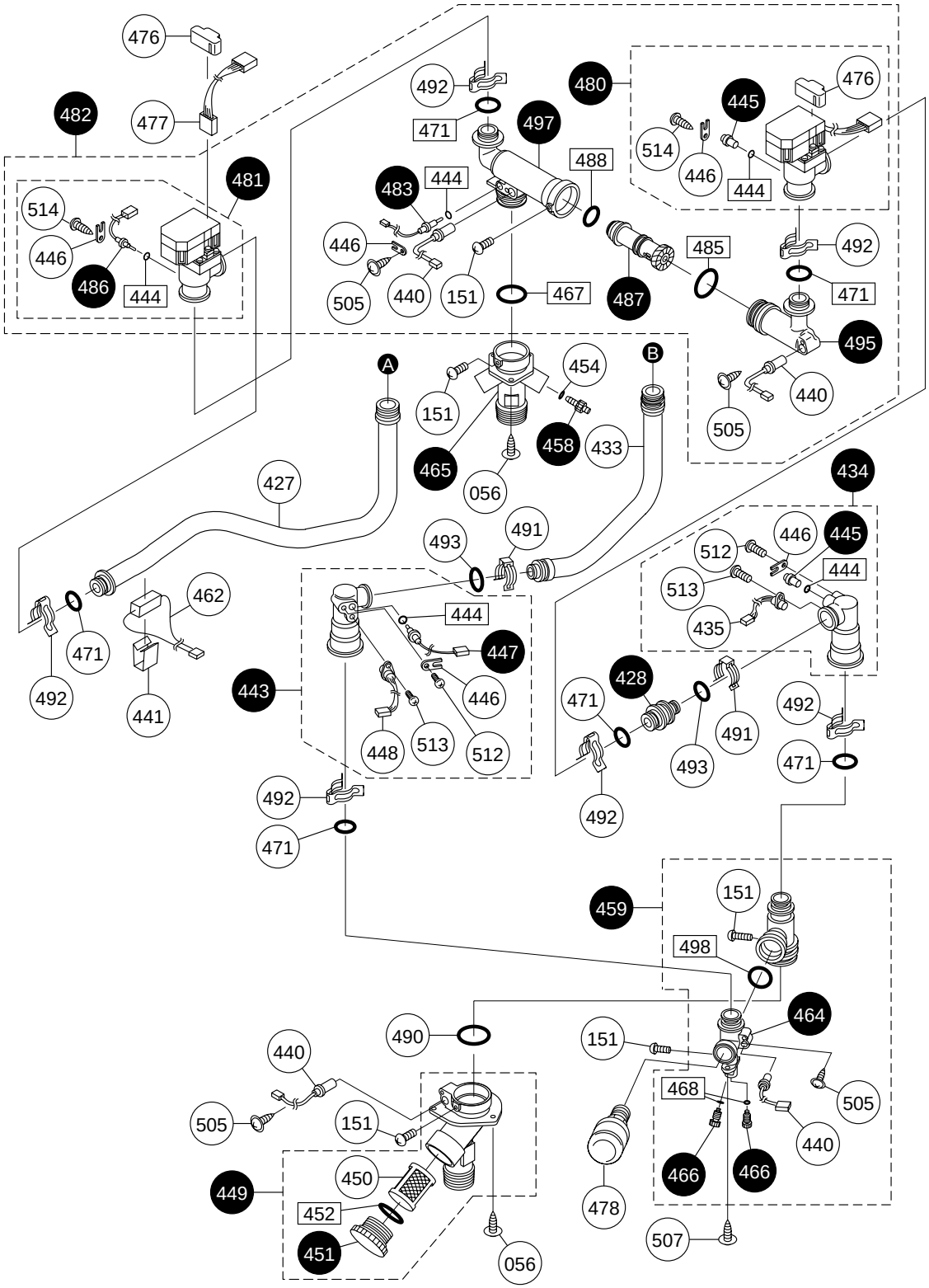

Hot-water feed route 1/Hot-water feed route 2

Part Nos.	Part Names	Order Nos.	Q'ty/unit
400	Heat exchanger DMA	DMAB001	1
401	Thermal fuse fastener DMA	DMAH002	4
402	Heat insulator DMB	DMBL004	3
403	Thermal fuse DFE 1 SET-V	SBA7650	1
404	Thermal fuse DMA SET-V	SBA7536	1
405	O-ring P20C	3059502	2
406	Exhaust box set DMB	DMBF001	1
410	Exhaust cylinder packing DMB	DMBL002	1
411	Case top cover DMB	DMBA006	1
412	Exhaust cylinder set DMB	DMBF002	1
413	Top cover packing DMB	DMBL001	1
414	Exhaust joint packing DMA	DMAL002	1
415	Freeze preventive heater CRP 1 SET-V	SBC7676	1
416	Heater fastener DMA	DMAH003	6
417	Remaining flame safety device 96 EHU	EHUH001	1
418	FFL wind pressure switch	1735705	1
419	Mouting plate for wind pressure switch DMB	DMBA010	1
420	Pressure sampling pipe DGG	DGGF011	1
421	Pressure sampling pipe packing CPL	CPLF029	1
422	Silicone tube ID6XT2X210 BVH	BVHF009	1
423	Thermostat BHV	BHVH002	1
424	Wind pressure switch relay cord EAW	EAWJ005	1
426	Exhaust adapter EJH	EJHF001	1
427	Hot-water feed pipe EHA	EHAD003	1
428	Bypass coupling EHA	EHAD014	1
433	Water inlet pipe EHA	EHAD001	1
434	Water flow sensor set 1 DUV	DUVD017	1
435	Magnetic sensor BWC	BWCD093	1
440	Freeze preventive heater3 BGD	BGDH002	4
441	Heater fastener LL CPL	CPLL002	1
443	Water flow sensor set3 DUV	DUVD019	1
444	O-ring P4C	1323709	5
445	Shut-off cock AXG	AXGD089	2
446	Thermistor holding plate ALS	ALSD088	5
447	Water inlet thermistor BWC	BWCD097	1
448	Water outlet magnetic sensor BWC	BWCD090	1
449	Water inlet fitting 25A set EAU	EAUD001	1
450	Water inlet filter CCP	CCPD031	1
451	Water inlet fitting cover DMA	DMAD037	1
452	O-ring JASO 2030 type4 C	SAB4190	1
454	Hot-water resistant O-ring P3	SAD6633	1
458	Drain cock CRU	CRUD003	1
459	Branching fitting set EHA	EHAD012	1
462	Freeze preventive heater 2 BGD	BGDH005	1
464	Drain coupling EHA	EHAD013	1
465	Hot-water outlet fitting EJH	EJHD001	1
466	QMF safety valve	SAA2811	2
467	O-ring P24C	1322109	1
468	Hot-water resistant O-ring P9	SAD6635	2
471	O-ring P16C	3223302	6
476	Waterproof cover CZL	CZLD041	2
477	Conduit 86 DZT	DZTJ008	1
478	Accumulator set DLW	DLWD001	1
480	Water flow servo set 1 DZT	DZTD010	1
481	Water flow servo set2 DZT	DZTD011	1

Hot-water feed route 1/Hot-water feed route 2

Part Nos.	Part Names	Order Nos.	Q'ty/unit
482	Mixing mechanism set EHA	EHAD008	1
483	Hot-water thermistor BWC	BWCD096	1
485	O-ring JASO 2026 type4 C	SAA6483	1
486	Heat exchanger thermister BWC	BWCD098	1
487	Mixing cylinder DMA	DMAD016	1
488	O-ring P18C	2308401	1
490	O-ring P28C	1155105	1
491	Quick fastner 12.7	6340202	2
492	Quick fastner 16A	6340300	6
493	O-ring P12.5C	3359808	2
495	Mixing coupling EHA	EHAD011	1
497	Mixing body EHA	EHAD010	1
498	O-ring P22C	7573308	1
505	Cross & straight recessed round-head collar type3 S TIGHT tapping screw 4X8		
507	Cross & straight recessed truss type3 S TIGHT tapping screw with PW 4X8		
512	Cross recessed round-head P TIGHT screw 4X14		
513	Cross recessed truss P TIGHT screw 4X10		
514	Cross recessed round-head P TIGHT screw 4X14		

Electronic control unit

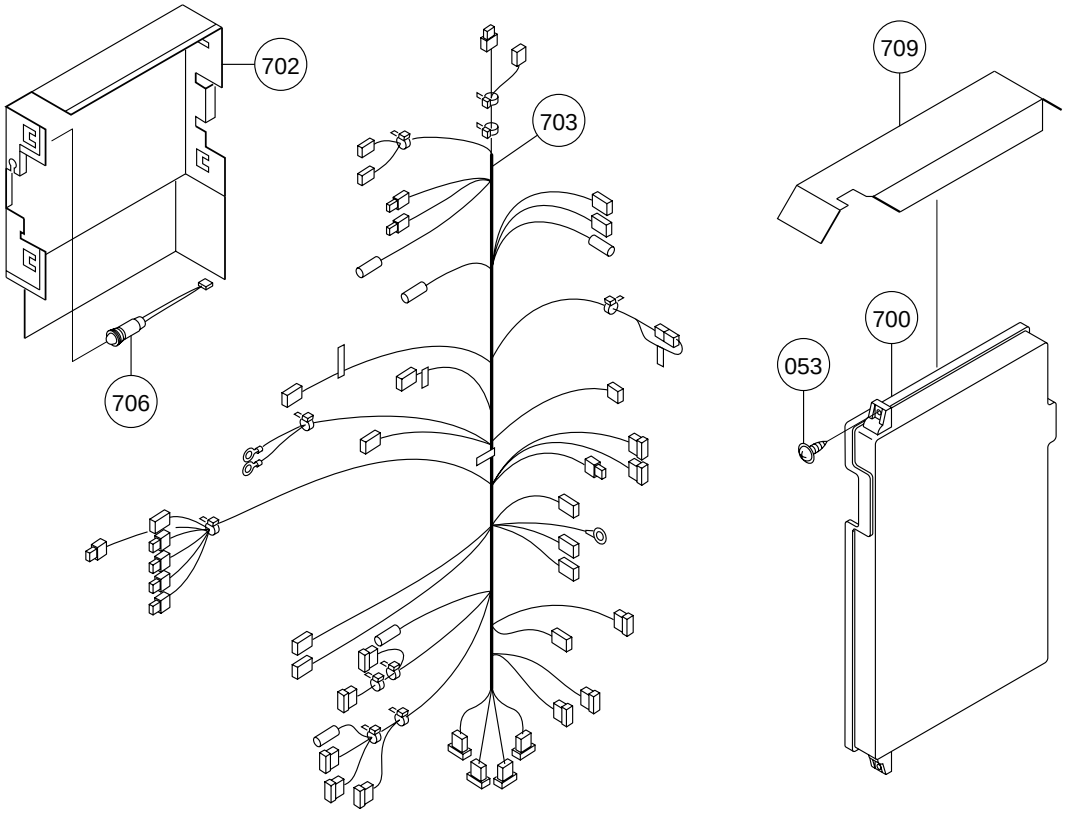

Remote controller

kitchen remote controller
(RC-7646M-2-USA)

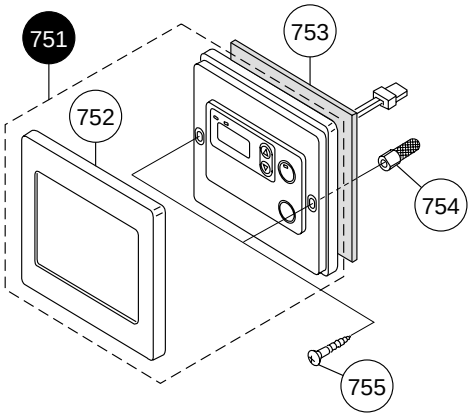

Attached set

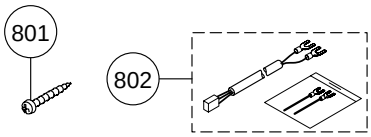

<Special part>

Special part	Special part no.
instruction manual	888

Electronic control unit, Remote controller and Attached set

Part Nos.	Part Names	Order Nos.	Q'ty/unit
700	Relay case EJH SET-AS	SHA7586	1
	Power circuit board DUV	DUVG102	1
702	Relay case cover DMA	DMAA028	1
703	Harness EJH	EJHJ001	1
706	Lamp cable conduit CRP	CRPJ014	1
709	Relay case waterproof cover DMA	DMAA026	1
751	RC-7646M-2 body USA QME	QMEJ005	1
752	Drssed frame body QME	QMEA003	1
753	Wall packing QHU	QHUA115	1
754	Oar plug 6X25		
755	Cross recessed round wood screw 4.1X25		
800	N-132M packing set V	SBP7388	1
801	Cross recessed round-head type 1 tapping screw 5X35		
802	Remote controller cord S set EAU	EAUM001	1
888	Instruction manual N-132M	SAQ8975	1

Installation Manual

NORITZ AMERICA CORPORATION

GAS WATER HEATER

N-132M (Indoor/Outdoor Installation)

WARNING: If the information in this manual is not followed exactly, a fire or explosion may result causing property damage, personal injury or death.

Potential dangers from accidents during installation and use are divided into the following three categories. Closely observe these warnings, they are critical to your safety.

⚠ **Danger**	Danger of serious injury or even death as well as danger of fire when the product is misused by ignoring this symbol.
⚠ **Warning**	Possibility of serious injury or even death as well as possibility of fire when the product is misused by ignoring this symbol.
⚠ **Caution**	Possibility of bodily injury or damage to property when the product is misused by ignoring this symbol.

Prohibited

Disconnect Power

Ground

Be sure to do

Requests to Installers

⚠ Caution
- In order to use the water heater safely, read this installation manual carefully, and follow the installation instructions.

- Failures and damage caused by erroneous work or work not as instructed in this manual are not covered by the warranty.
- Check that the installation was done properly in accordance with this Installation Manual upon completion.
- After completion of installation, be sure to hand the Operation Manual (with warranty) to the customer upon filling in all of the required items.

Installation must conform with local codes, or in the absence of local codes, the National Fuel Gas Code, ANSI Z223.1/NFPA 54.

1. Included Accessories

The following accessories are included with the unit. Check for any missing items before starting installation.

Part	Shape	Q'ty	Part	Shape	Q'ty
Tapping Screw	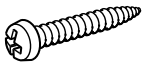	5	Installation Manual (this document)		1
Remote Controller (See p. 54)		1	Remote Controller Cord (10 ft)		1

2. Optional Accessories

The accessories listed below are not included with the units, but may be necessary for installation.

Part	Shape	Q'ty	Part	Shape	Q'ty
VC-132 Outdoor Vent Cap		1	Remote Controller Cord (26 ft)		1
Quick Connect Cord		1	System Controller	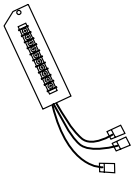	1
Outdoor Remote Control Junction Box	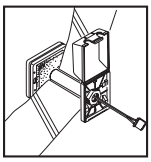	1			
Isolator Valves (includes pressure relief valve)	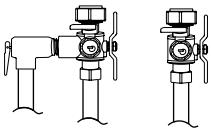	1	PC-132M Pipe Cover	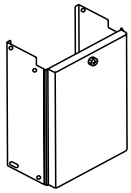	1

3. Quick Connect Multi System Installation

- The Quick Connect Multi System allows the installation of two units together utilizing only a single cord, eliminating the necessity of a System Controller in such installations.
  * If a two unit Multi System will be used with a circulating loop, do not use the Quick Connect method. For proper operation, install a System Controller in this case. Refer to the System Controller Installation Manual and pps. 58-61 of this manual for System Controller installation.

The Quick Connect Cord is 6 ft. long. Install the two units 20"-36" apart at the center to ensure the cord will be able to reach between the units. (See Typical Plumbing diagram).
(If the distance between the two units is too great, not only will the cord not be able to reach, but the water temperature may also become unstable because of the difference in pipe length between the two units.)

System Diagram

* When connecting 2 devices, use only a single remote controller.

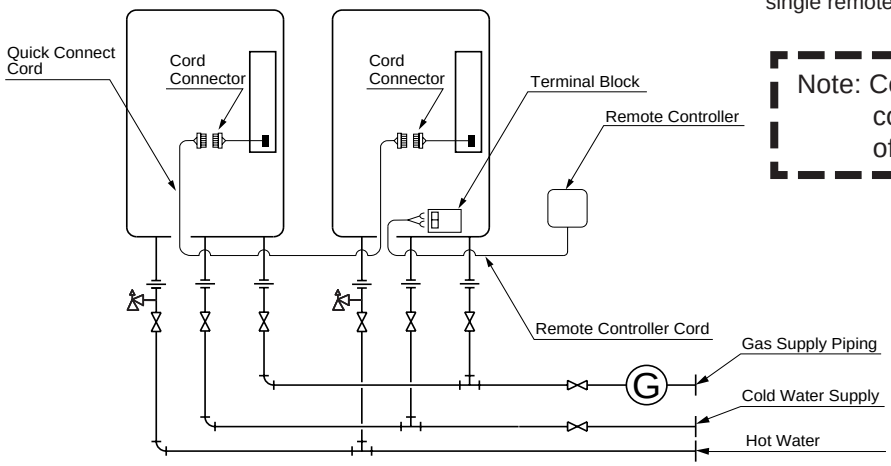

Note: Connect the remote controller to only one of the devices.

Typical Plumbing

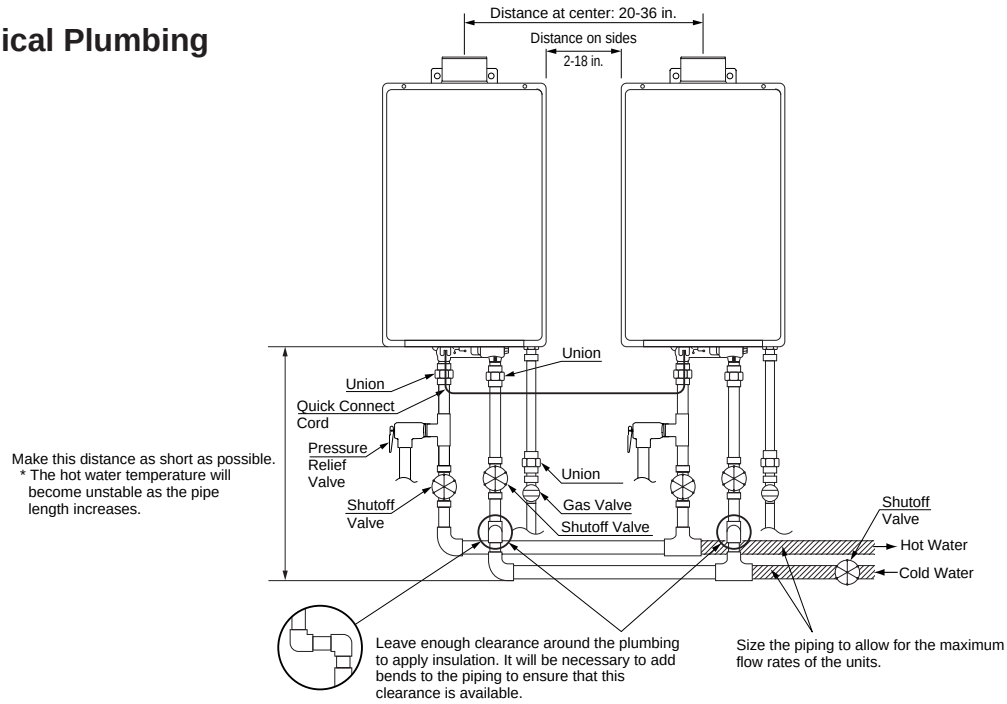

- Insulate the hot water piping to prevent heat loss. Insulate and apply heating materials to the cold water supply piping to prevent heat loss and freezing of pipes when exposed to excessively cold temperatures.

4. Before Installation ⚠ Caution

Check the Gas

- Check that the rating plate indicates the correct type of gas.
  Check that the gas supply line is sized
  for 380,000 Btuh for this unit.

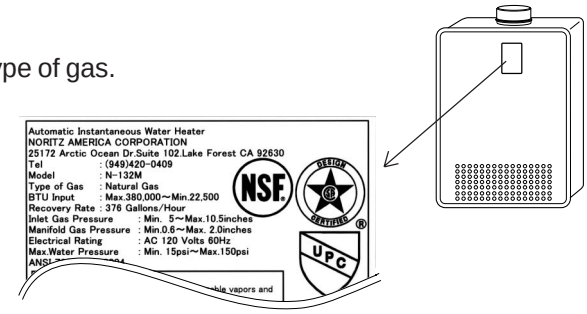

Check the Power

- The power supply required is 120V AC,
  at 60Hz. Using the incorrect voltage
  may result in fire or electric shock.

Do Not Use Equipment for Purposes Other Than Those Specified

- Do not use for purposes other than increasing the temperature of the water supply, as unexpected accidents may occur as a result.

Check Water Supply Quality

- If the water supply is hard, acidic or otherwise impure, treat the water with approved methods in order to ensure full warranty coverage.

Use Extreme Caution if Using With A Solar Pre-Heater

- Using this unit with a solar pre-heater can lead to unpredictable output temperatures and possibly scalding. If absolutely necessary, use mixing valves to ensure output temperatures do not get to scalding levels. Do not use a solar pre-heater with the quick-connect multi-system.

Checkup

- Check the fixing brackets and vent pipe yearly for damage or wear. Replace if necessary.

5. Choosing Installation Site

* Locate the appliance in an area where leakage from the unit or connections will not result in damage to the area adjacent to the appliance or to the lower floors of the structure. When such locations cannot be avoided, it is recommended that a suitable drain pan, adequately drained, be installed under the appliance. The pan must not restrict combustion air flow.

⚠ Caution

- Install the water heater in a location where it is free from obstacles and stagnant air.
- Consult with the customer concerning the location of installation.
- Do not install the water heater near staircases or emergency exits.
- Avoid places where fires are common, such as those where gasoline, benzene and adhesives are handled, or places in which corrosive gases (ammonia, chlorine, sulfur, ethylene compounds, acids) are present.
  Using the incorrect voltage may result in fire or cracking.

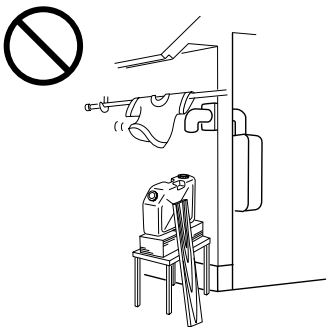

- Install the exhaust vent so that there are no obstacles around the termination and so that exhaust can't accumulate. Do not enclose the termination with corrugated metal or other materials.
- Do not install the water heater where the exhaust will blow on outer walls or material not resistant to heat. Also consider the surrounding trees and animals.
  The heat and moisture from the water heater may cause discoloration of walls and resinous materials, or corrosion of aluminum materials.

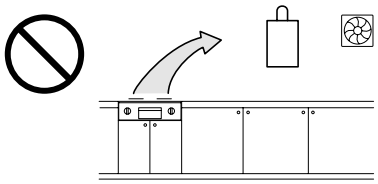

- Do not locate the vent termination directed towards a window or anything other structure which has glass or wired glass facing the termination.
- Avoid installation above gas ranges or stoves.
- Avoid installation between the kitchen fan and stove. If oily fumes or a large amount of steam are present in the installation location, take measures to prevent the fumes and steam from entering in the equipment.

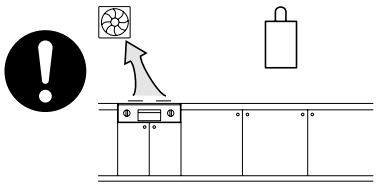

- Avoid installation in places where dust or debris will accumulate.
  Dust may block the air-supply opening, causing the performance of the device fan to drop and incomplete combustion to occur as a result.
- Install in a location where the exhaust gas flow will not be affected by fans or range hoods.
- Take care that noise and exhaust gas will not affect neighbors.
- Make sure that the location allows installation of the exhaust vent as specified.
- Avoid installation in places where special chemical agents (e.g., hair spray or spray detergent) are used.
  Ignition failures and malfunction may occur as a result.
- For outdoor installation, use the VC-132 outdoor vent cap. If it is necessary to vent above the roof line in an outdoor installation, also use the base of the VC-132 vent cap for rain protection.
- Avoid installation where the unit will be exposed to excessive winds.
- Before installing, make sure that the vent termination (or the vent cap in an outdoor installation) will have the proper clearances according to the National Fuel Gas Code (ANSI Z223.1).

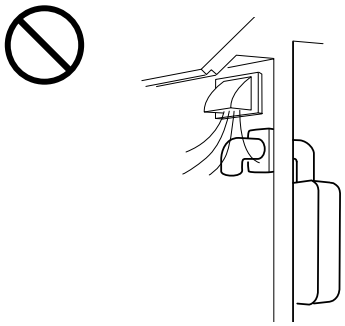

6. Installation Clearances ⚠ Caution

Before installing, check for the following:

Install in accordance with relevant building and mechanical codes, as well as any local, state or national regulations.

Item	Check	Illustration
Required Clearances From Heater	• Maintain the following clearance from both combustible and non-combustible materials.	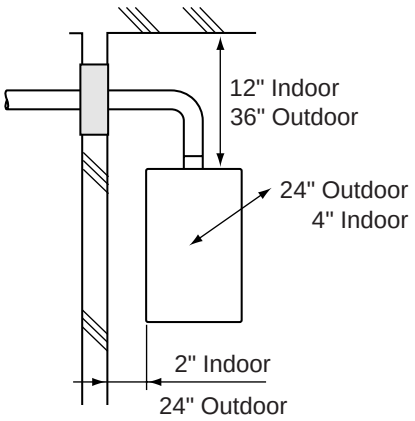
Cooking Equipment	• If the unit will be installed in the vicinity of a permanent kitchen range or stove that has the possibility of generating steam that contains fats or oils, use a dividing plate or other measure to ensure that the unit is not exposed to air containing such impurities. * The dividing plate should be of noncombustible material of a width greater than the water heater.	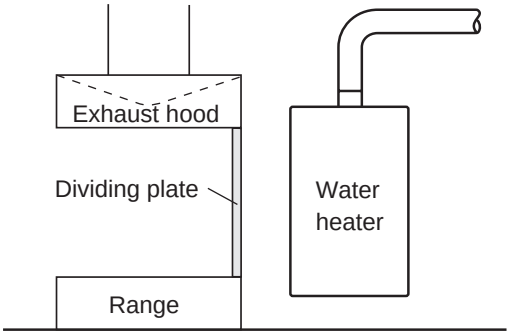
Securing of space for repair/inspection	• If possible, leave 8" or more on either side of the unit to facilitate inspection. • If possible, leave 24" or more in front of the unit to facilitate maintenance and service if necessary.	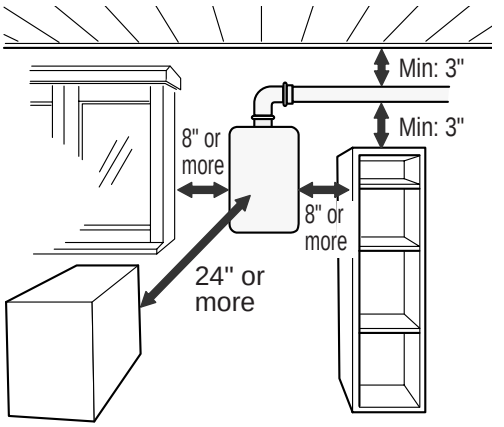 (unit: inch)

Clearance Requirements from Vent Terminations to Building Openings

* All clearance requirements are in accordance with ANSI Z21.10.3a-2003 and the National Fuel Gas Code, ANSI Z223.1.

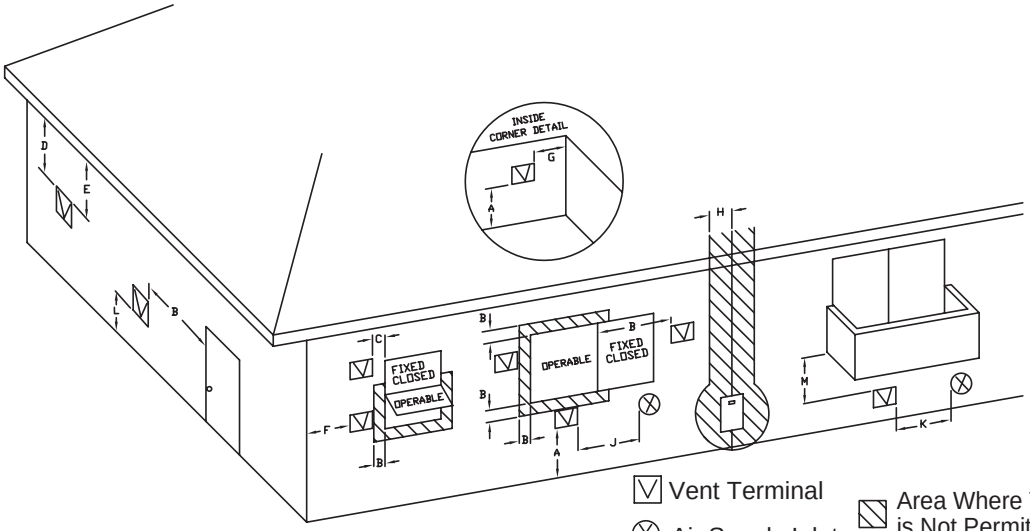

Vent Terminal

Air Supply Inlet

Area Where Terminal is Not Permitted

	Clearance	Indoor Installation (See p.44)	Outdoor Installation (See p.44)
A=	Above grade, veranda, porch, deck, or balcony	12" (12")	12" (12")
B=	Window or door that may be opened	4' below or to the side of opening, or 1' above opening (36")	12" (36")
C=	Permanently closed window	*	*
D=	Vertical clearance to ventilated soffit located above the terminal within a horizontal distance of 2 feet from the center of the terminal	*	*
E=	Unventilated soffit	*	*
F=	Outside corner	*	*
G=	Inside corner	*	*
H=	Each side of center line extended above meter/regulator assembly	3' within a height 15' above meter/regulator assembly	3' within a height 15' above meter/regulator assembly
I=	Service regulator vent outlet	3'	3'
J=	Nonmechanical air supply inlet or combustion air inlet to any other appliance	4' below or to the side of opening, or 1' above opening (36")	12" (36")
K=	Mechanical air supply inlet	3' above if within 10' (6')	3' above if within 10' (6')
L=	Above paved sidewalk or paved driveway located on public property	(7' ***)	(7' ***)
M=	Under veranda, porch, deck, or balcony	* (12"- Canada Only****)	* (12"- Canada Only****)

()= indicates clearances required in Canada
*Maintain clearances in accordance with local installation codes and the requirements of the gas supplier
***A vent shall not terminate directly above a sidewalk or paved driveway that is located between two single family dwellings and serves both dwellings.
****Permitted only if veranda,porch,deck,or balcony is fully open on a minimum of two sides beneath the floor.

Clearance Requirements from Vent Terminations to Building Openings

* All clearance requirements are in accordance with ANSI Z21.10.3a-2003 and the National Fuel Gas Code, ANSI Z223.1.

	Maintain the following clearances to any opening in any building:	Illustration
Vent Clearances When Heater is Installed Indoors	• 4' below, 4' horizontally from, or 1' above any door, operable window, or gravity air inlet into any building. 3' above any forced air inlet within 10'.	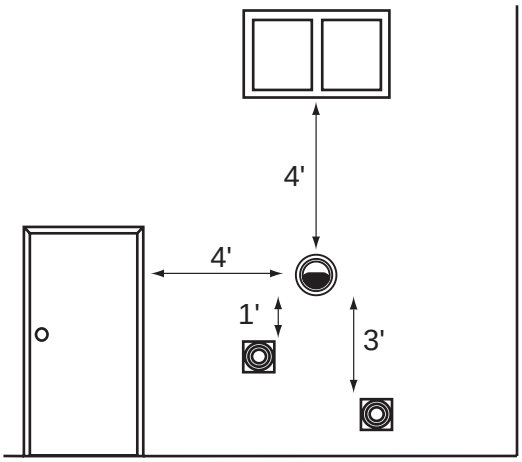
Vent Clearances When Heater is Installed Outdoors With a Vent Cap	• 1' below, 1' horizontally from, or 1' above any door, operable window, or gravity air inlet into any building. 3' above any forced air inlet within 10'. 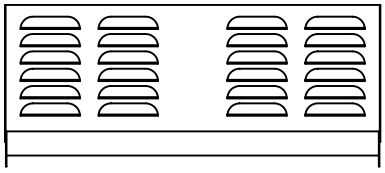 (Noritz vent cap)	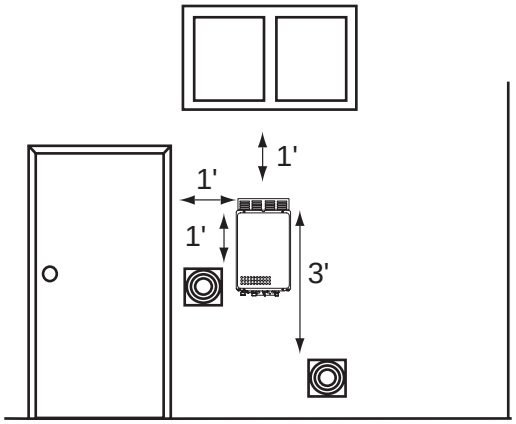

* For Installations in Canada, clearances are as follows: To windows, doors, & gravity air inlets: 36". To forced air inlets: 6'. These clearance requirements hold true for all of the above situations: Indoor, Outdoor w/vent cap.

7. Installation

Securing to the wall

- The weight of the device will be applied to the wall. If the strength of the wall is not sufficient, reinforcement must be done to prevent the transfer of vibration.
- Do not drop or apply unnecessary force to the device when installing. Internal parts may be damaged and may become highly dangerous.
- Install the unit on a vertical wall and ensure that it is level.

Item	Check	Illustration
Locating Screw Holes	**Caution** • When installing with bare hands, take caution to not inflict injury. • Be careful not to hit electrical wiring, gas, or water piping while drilling holes. 1. Drill a single screw hole, making sure to hit a stud. 2. Insert and tighten the screw and hang the unit by the upper wall mounting bracket. 3. Determine the positions for the remaining four screws (two for the top bracket and two for the bottom), and remove the unit.	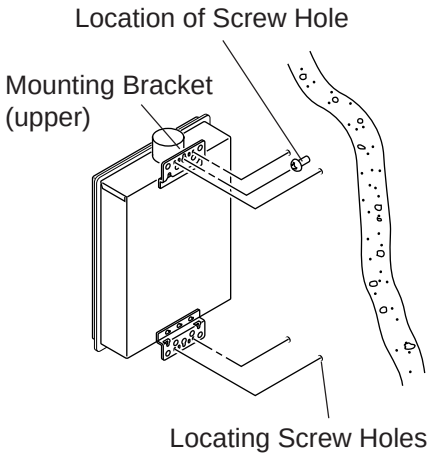
Mounting	4. Drill holes for the remaining four screws. 5. Hang the unit again by the first screw, and then insert and tighten the remaining four screws. 6. Take waterproofing measures so that water does not enter the building from screws mounting the device.	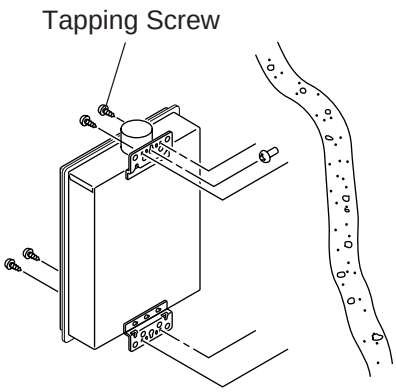
Structure	• Make sure the unit is installed securely so that it will not fall or move due to vibrations or earth-quakes.	

8. Vent Pipe Installation (Indoor Installation Only)

Vent Piping

- Use only listed category III vent materials.
- Follow the vent pipe manufacturer's installation instructions.

Pipe diameter	5"

No. of Elbows	Max. Straight Vent Length
3	15'
2	30'
1	45'

- Make the vertical section of the exhaust vent as short as possible.
- Maintain the same vent pipe diameter all the way to the end.

Clearances

Manufacturer and Product	Enclosed		Unenclosed	
	Hor.	Vert.	Hor.	Vert.
Noritz N-Vent	10" (sides) 15"(top) 6"(bottom)	6"	3"	3"
Protech FasNSeal	Noncombustible Enclosure		3"	3"
Protech FasNSeal W2	6"	6"	3"	3"
HeatFab SafTVent	6"	6"	2"	2"
Z-Flex Z-Vent	8"	4"	1"	1"

These clearances are subject to change.
Refer to the UL listing for the proper clearances.

- The first vertical run from the top of the heater should be no longer than 3'.
- Make sure vent pipe is gas tight and will not leak. Use silicon sealant wherever necessary.
- Do not common vent or connect more than one appliance to this venting system.
- The total vent length including horizontal & vertical vent runs should be no less than 3'.
- Do not place any dangerous objects at the end of the exhaust vent.
- Steam (smoke) or water drops may come out from the end of the exhaust pipe. Select the location for the end of the vent so that steam is not visible, and the vent is not wet with dripping water.
- If snow is expected to accumulate, take care the end of the pipe is not covered with snow or hit by falling lumps of snow.
- Consult the vent pipe manufacturer's installation instructions for chimney connections.

Appliance Adapters

- Use the following adapters to connect the unit to the venting system.

Manufacturer and Product	Part No.
Protech FasNSeal	FSAA5
HeatFab SafTVent	9501NOR
Z-Flex Z-Vent	2SVWA05

Horizontal Vent Termination

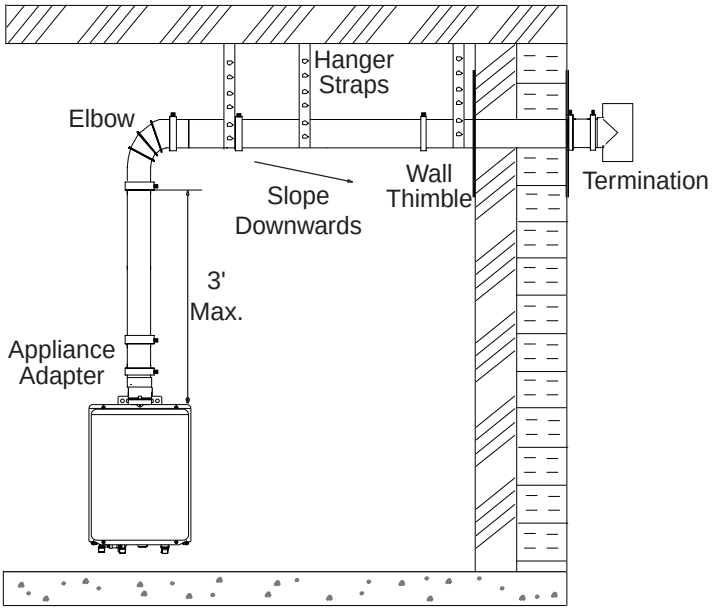

- Terminate at least 12" above grade or above snow line.
- Terminate at least 7' above a public walkway, 6' from the combustion air intake of any appliance, and 3' from any other building opening, gas utility meter, service regulator etc.
- Terminate at least 3' above any forced air inlet within 10', 4' below, 4' horizontally from and 1' above any door, window, or gravity air inlet into any building per National Fuel Gas Code ANSI Z223.1/NFPA 54.
- Slope the horizontal vent 1/4" downwards for every 12".
- Use a condensation drain if necessary.

Vertical Vent Termination

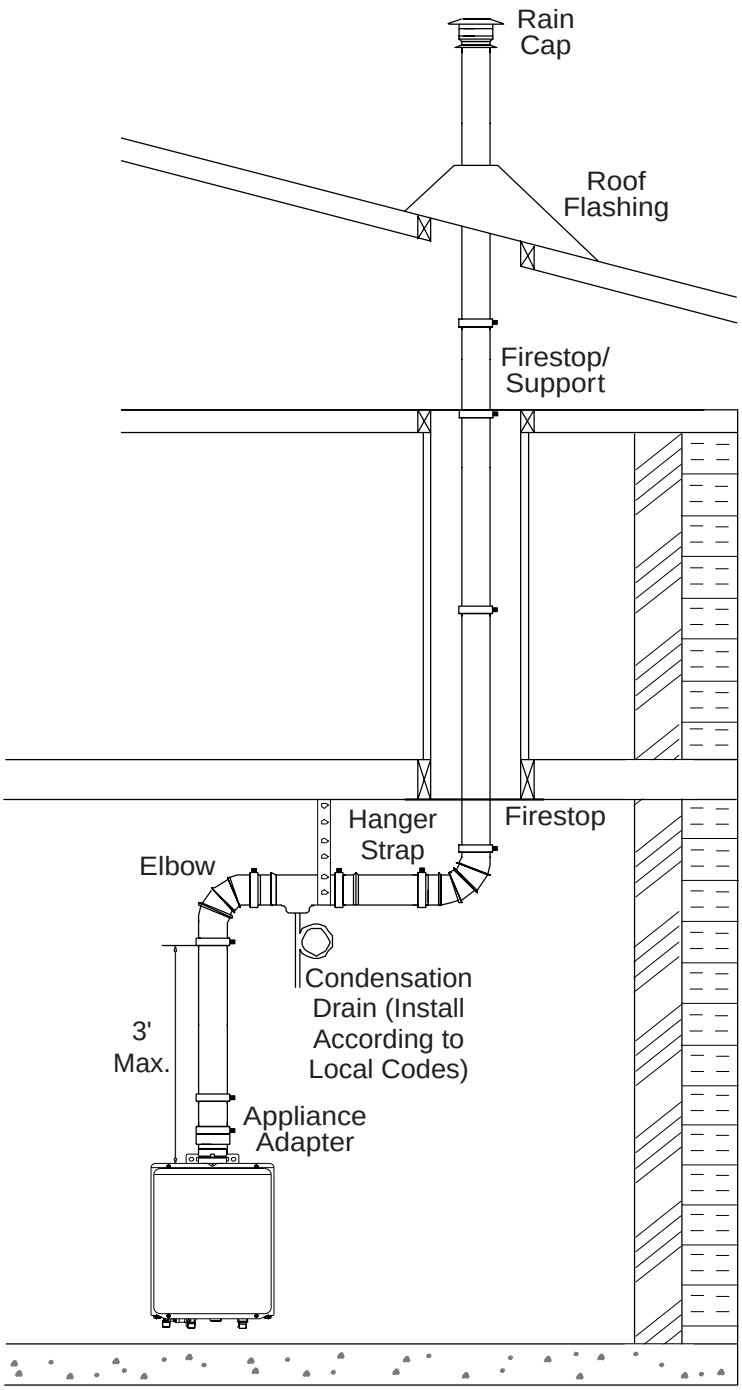

- Terminate at least 6' from the combustion air intake of any appliance, and 3' from any other building opening, gas utility meter, service regulator etc.
- Enclose exterior vent systems below the roof line to limit condensation and protect against mechanical failure.
- When the vent penetrates a floor or ceiling and is not running in a fire rated shaft, a firestop and support is required.
- Terminate the vent system at least 3' above, but not more than 6' above the roof line, or according to the vent pipe manufacturer's instructions.
- Provide vertical support every 12' or as required by the vent pipe manufacturer's instructions.
- Slope the horizontal vent 1/4" downwards for every 12".
- Do not vent straight upwards. Always have a horizontal section of venting.
- Install a condensation drain in the horizontal section of the venting.

Combustion Air	Supply combustion air to the units as per the National Fuel Gas Code, ANSI Z223.1.

- Provide two permanent openings to allow circulation of combustion air.
- Make each opening 380 square inches if they provide indoor air, and 100 square inches for outdoor air.
- If the unit is installed in a mechanical closet, provide a 24" clearance in front of the unit to the door.
- If combustion air will be provided through a duct, size the duct to provide 100 cubic feet of fresh air per minute.

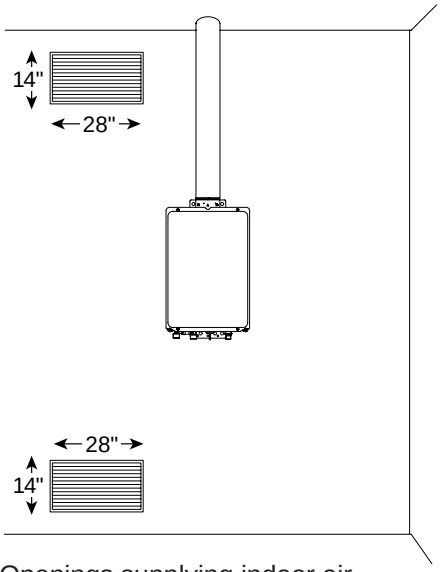

Openings supplying indoor air

9. Gas Piping

Follow the instructions from the gas supplier.

The appliance and its individual shutoff valve must be disconnected from the gas supply piping system during any pressure testing of that system at test pressures in excess of ½ psig (3.5 kPa).
The Appliance must be isolated from the gas supply piping system by closing its individual manual shutoff valve during any pressure testing of the gas supply piping system at test pressures equal to or less than ½ psig (3.5 kPa).

The appliance and its gas connections must be leak tested before placing the appliance in operation.

The inlet gas pressure must be within the range specified. This is for the purposes of input adjustment.

In order to choose the proper size for the gas line, consult local codes or the National Fuel Gas Code ANSI Z223.1.

Gas Pressure
Size the gas line according to total btuh demand of the building and length from the meter or regulator so that the following supply pressures are available even at maximum demand:

Natural Gas Supply Pressure
Min. 5" WC
Max. 10.5" WC

LP Gas Supply Pressure
Min. 10.5" WC
Max. 14" WC

Gas Meter
Select a gas meter capable of supplying the entire btuh demand of all gas appliances in the building.

Gas Connection
- Do not use piping with a diameter smaller than the inlet diameter of the water heater.
- Gas flex lines are not recommended unless they are rated for 380,000 btuh.
- Install a gas shutoff valve on the supply line.
- Use only approved gas piping materials.

Measuring Gas Pressure

In order to check the gas supply pressure to the unit, a tap is provided on the gas inlet. Remove the hex head philips screw from the tap, and connect a manometer using a silicon tube.

In order to check the gas manifold pressure, a pair of taps are provided on the gas valve inside the unit.
The pressure can be checked either by removing the hex head philips screw and connecting a manometer with a silicon tube, or by removing the 1/8" NPT screw with an allen wrench and connecting the appropriate pressure gauge.

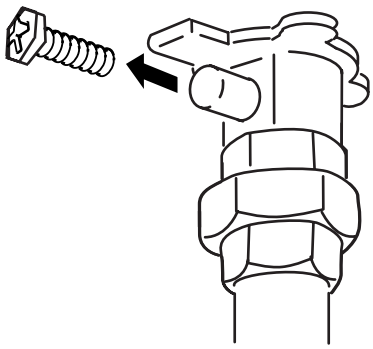

Sample Gas Line

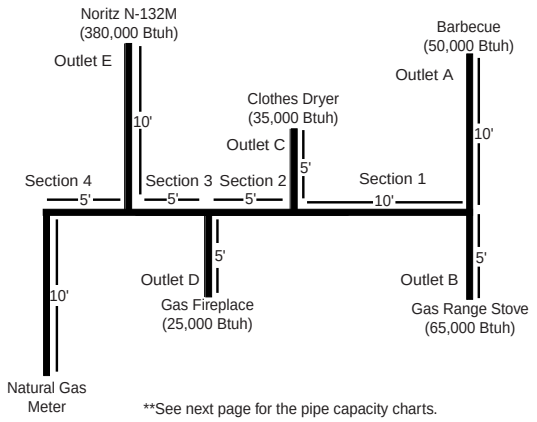

**Instructions

1. Size each outlet branch starting from the furthest using the Btuh required and the length from the meter.
2. Size each section of the main line using the length to the furthest outlet and the Btuh required by everything after that section.

Sample Calculation

Outlet A: 45' (Use 50'), 50,000 Btuh requires 1/2"
Outlet B: 40', 65,000 Btuh requires 1/2"
Section 1: 45' (Use 50'), 115,000 Btuh requires 3/4"
Outlet C: 30', 35,000 Btuh requires 1/2"
Section 2: 45' (Use 50'), 150,000 Btuh requires 3/4"
Outlet D: 25' (Use 30'), 25,000 Btuh requires 1/2"
Section 3: 45' (Use 50'), 175,000 Btuh requires 1"
Outlet E: 25' (Use 30'), 380,000 Btuh requires 1 1/4"
Section 4: 45' (Use 50'), 555,000 Btuh requires 1 1/4"

**See next page for the pipe capacity charts.

Gas Line Sizing for a Noritz N-132M

Adapted from UPC 1997

Maximum **Natural Gas** Delivery Capacity in Cubic Feet per Hour (0.60 Specific Gravity, 0.5" WC Pressure Drop)

Pipe Size	Length in Feet										
	10'	20'	30'	40'	50'	60'	70'	80'	90'	100'	125'
1/2"	174	119	96	82	73	66	61	56	53	50	44
3/4"	363	249	200	171	152	138	127	118	111	104	93
1"	684	470	377	323	286	259	239	222	208	197	174
1 1/4"	1404	965	775	663	588	532	490	456	428	404	358
1 1/2"	2103	1445	1161	993	880	798	734	683	641	605	536
2"	4050	2784	2235	1913	1696	1536	1413	1315	1234	1165	1033
2 1/2"	6455	4437	3563	3049	2703	2449	2253	2096	1966	1857	1646
3"	11,412	7843	6299	5391	4778	4329	3983	3705	3476	3284	2910
3 1/2"	16,709	11,484	9222	7893	6995	6338	5831	5425	5090	4808	4261
4"	23,277	15,998	12,847	10,995	9745	8830	8123	7557	7091	6698	5936

Contact the Gas Supplier for Btu/Cubic Ft. of the Supplied Gas. 1000 BTU/Cubic Ft. is a Typical Value

Maximum **Liquified Petroleum** (Undiluted) Delivery Capacity in Thousands of Btuh (0.5" WC Pressure Drop)

Pipe Size	Length in Feet												
	10'	20'	30'	40'	50'	60'	70'	80'	90'	100'	125'	150'	200'
1/2"	275	189	152	129	114	103	96	89	83	78	69	63	55
3/4"	567	393	315	267	237	217	196	185	173	162	146	132	112
1"	1071	732	590	504	448	409	378	346	322	307	275	252	213
1 1/4"	2205	1496	1212	1039	913	834	771	724	677	630	567	511	440
1 1/2"	3307	2299	1858	1559	1417	1275	1181	1086	1023	976	866	787	675
2"	6221	4331	3465	2992	2646	2394	2205	2047	1921	1811	1606	1496	1260

** For reference only. Please consult gas pipe manufacturer for actual pipe capacities.

Maximum Capacity of Flex TracPipe® in Cubic Feet per Hour of **Natural Gas** (0.60 Specific Gravity, 0.5" WC Pressure Drop)

Pipe Size	Length in Feet											
	10'	20'	30'	40'	50'	60'	70'	80'	90'	100'	150'	200'
3/4"	206	147	121	105	94	86	80	75	71	67	55	48
1"	383	269	218	188	168	153	141	132	125	118	94	82
1 1/4"	614	418	334	284	251	227	209	194	181	171	137	116
1 1/2"	1261	888	723	625	559	509	471	440	415	393	320	277
2"	2934	2078	1698	1472	1317	1203	1114	1042	983	933	762	661

Maximum Capacity of Flex TracPipe® in Thousands of Btuh **Liquified Petroleum** (0.5" WC Pressure Drop)

Pipe Size	Length in Feet											
	10'	20'	30'	40'	50'	60'	70'	80'	90'	100'	150'	200'
3/4"	325	232	191	166	149	136	126	118	112	106	87	76
1"	605	425	344	297	265	241	222	208	197	186	143	129
1 1/4"	971	661	528	449	397	359	330	307	286	270	217	183
1 1/2"	1993	1404	1143	988	884	805	745	696	656	621	506	438
2"	4638	3285	2684	2327	2082	1902	1761	1647	1554	1475	1205	1045

** For reference only. Please consult gas pipe manufacturer for actual pipe capacities.

TracPipe® is a registered trademark of Omega Flex.

Maximum Capacity for Gas Flex Connectors in Cubic Feet per Hour of **Natural Gas** (0.60 Specific Gravity, 0.5" WC Pressure Drop)

Pipe Size	Length in Inches					
	12"	24"	36"	48"	60"	72"
1/2"	180	150	125	106	93	86
3/4"	—	290	255	215	197	173
1"	—	581	512	442	397	347
1 1/4"	—	1470	1200	1130	960	930

Maximum Capacity for Gas Flex Connectors in Thousands of Btuh **Liquified Petroleum** (0.5" WC Pressure Drop)

Pipe Size	Length in Inches					
	12"	24"	36"	48"	60"	72"
1/2"	288	240	200	169	149	137
3/4"	—	465	409	344	315	278
1"	—	930	825	708	638	556
1 1/4"	—	2352	1920	1808	1536	1488

** For reference only. Please consult gas pipe manufacturer for actual pipe capacities.

10. Water Piping

Ask a qualified plumber to perform the installation of the plumbing. Observe all applicable codes.

This appliance is suitable for potable water and space heating applications. Do not use this appliance if any part has been underwater. Immediately call a qualified service technician to inspect the appliance and replace any part of the control system and gas control which has been under water.

If the water heater is installed in a closed water supply system, such as one having a backflow preventer in the cold water supply line, means shall be provided to control thermal expansion. Contact the water supplier or a local plumbing inspector on how to control this situation.

A pressure relief valve must be installed near the hot water outlet that is rated in accordance with and complying with either The Standard for Relief Valves and Automatic Shutoff Devices for Hot Water Supply Systems, ANSI Z21.22, or The ANSI/ASME Boiler and Pressure Vessel Code, Section IV (Heating Boilers). This pressure relief valve must be capable of an hourly Btu rated temperature steam discharge of 380,000 Btuh. Multiple valves may be used. The pressure relief capacity must not exceed 150 psig. No valve shall be placed between the relief valve and the water heater. The relief valve must be installed such that the discharge will be conducted to a suitable place for disposal when relief occurs. No reducing coupling or other restriction may be installed in the discharge line. The discharge line must be installed to allow complete drainage of both the valve and the line. If this unit is installed with a separate storage vessel, the separate vessel must have its own temperature and pressure relief valve. This valve must also comply with The Standard for Relief Valves and Automatic Gas Shutoff Devices for Hot Water Supply Systems, ANSI Z21.22. (in the U.S. only). A temperature relief valve is not required, but if one is used, do not install the valve with the probe directly in the flow of water. This may cause unwarranted discharge of the valve.

Piping and components connected to the water heater shall be suitable for use with potable water.
Toxic chemicals, such as those used for boiler treatment, shall not be introduced into the potable water.
A water heater used to supply potable water may not be connected to any heating system or components previously used with a nonpotable water heating appliance.
When water is required in one part of the system at a higher temperature than in the rest of the system, means such as a mixing valve shall be installed to temper the water to reduce the scald hazard.

- Flush water through the pipe to clean out metal powder, sand and dirt before connecting it.
- Take appropriate heat insulation measures (e.g., wrapping with heat insulation materials, using electric heaters) according to the climate of the region to prevent the pipe from freezing.
- Use a union coupling or flexible pipe for connecting the pipes to reduce the force applied to the piping.
- Do not use piping with a diameter smaller than the coupling.
- When feed water pressure is too high, insert a depressurizing valve, or take water hammer prevention measures.
- Avoid using joints as much as possible to keep the piping simple.
- Avoid piping in which an air holdup can occur.
- Use approved piping materials.
- If installing the unit on a roof:
  If the unit is installed on a roof to supply water to the levels below, make sure that the water pressure supplied to the unit does not drop below 29 psi. It may be necessary to install a pump system to ensure that the water pressure is maintained at this level.
  Check the pressure before putting the unit into operation.
  Failing to supply the proper pressure to the unit may result in noisy operation, shorter lifetime of the unit, and may cause the unit to shut down frequently.

Supply water piping

- Do not use PVC piping.
- Mount a check valve and a shut off valve (near the inlet).
- In order for the client to use the water heater comfortably, 98.1 to 491 kPa (14 to 70 PSI) of pressure is needed from the water supply.
  Be sure to check the water pressure. If the water pressure is low, the water heater cannot perform to its full capability, and may become a source of trouble for the client.

Drain piping

- Expansion water may drop from the pressure prevention device and wet the floor. If necessary, provide drain piping or use a drain hose to remove the water.

Hot water piping

- Do not use lead or PVC piping.
- The longer the piping, the greater the heat loss. Try to make the piping as short as possible.
- Use mixing valve with a low water resistance. Use shower heads with low pressure loss.
- If necessary, use a pump or other means to ensure that the supply water pressure to the inlet of the heater does not fall below 29 PSI when the maximum amount of water is being demanded. Also install a pressure meter on the inlet. If this is not done, local boiling will occur inside the water heater causing abnormal sounds and decreasing the durability of the heat exchanger.

11. Plumbing Applications

Recirculation System

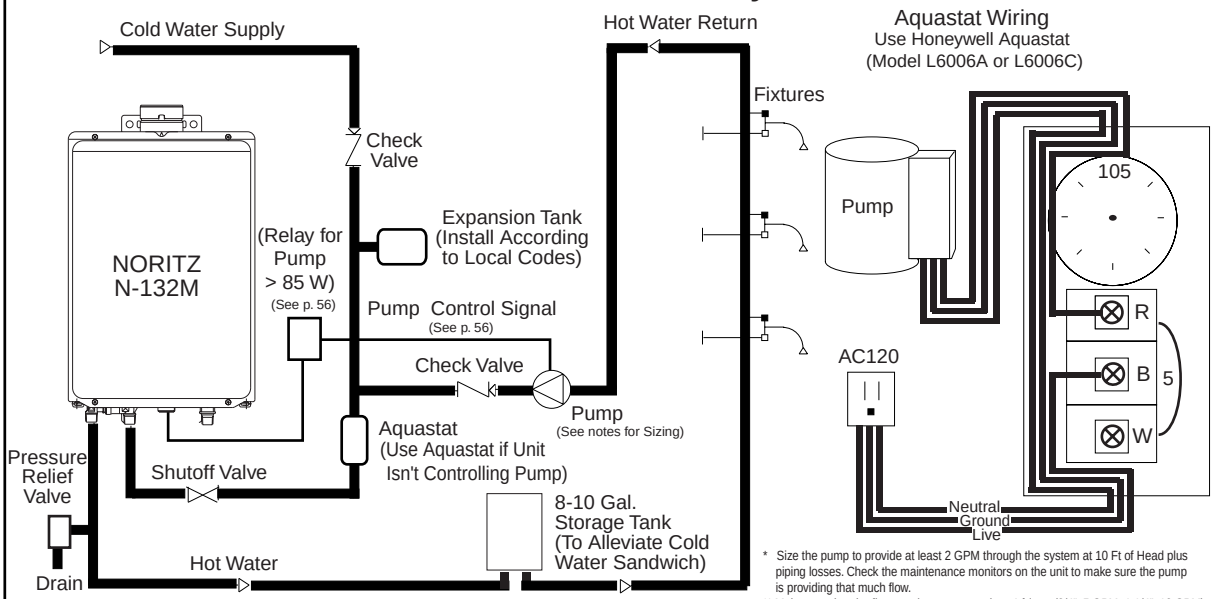

* Size the pump to provide at least 2 GPM through the system at 10 Ft of Head plus piping losses. Check the maintenance monitors on the unit to make sure the pump is providing that much flow.

** Make sure that the flow rate is not greater than 4 ft/sec. (3/4": 5 GPM, 1 1/4": 13 GPM)

Heating System

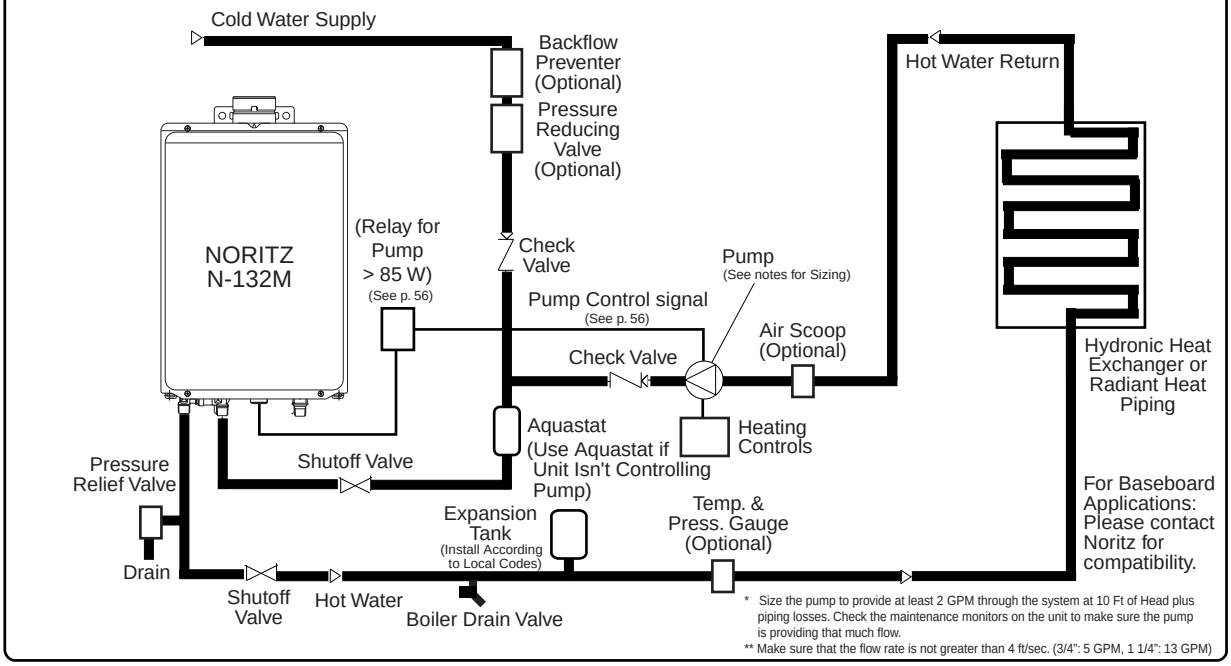

* Size the pump to provide at least 2 GPM through the system at 10 Ft of Head plus piping losses. Check the maintenance monitors on the unit to make sure the pump is providing that much flow.

** Make sure that the flow rate is not greater than 4 ft/sec. (3/4": 5 GPM, 1 1/4": 13 GPM)

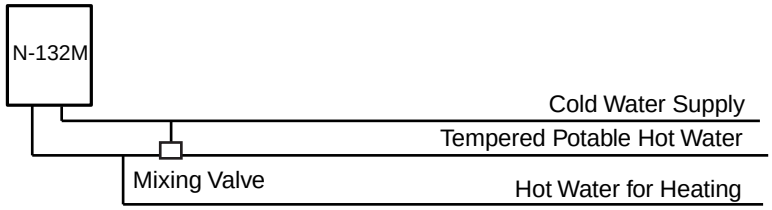

For Space Heating Purposes:

If the system requires water for space heating at a higher temperature than for other uses, means such as a mixing valve shall be provided to temper the water for the other uses to help prevent scalding.

12. Electrical Wiring

Consult qualified electrician for the electrical work.

Do not connect electrical power to the unit until all electrical wiring has been completed.

This appliance must be electrically grounded in accordance with local codes, or in the absence of local codes, with the National Electrical Code, ANSI/NFPA 70. In Canada, the latest CSA C22.1 Electrical Code.

Caution: Label all wires prior to disconnection when servicing controls. Wiring errors can cause improper and dangerous operation.

Verify proper operation after servicing.

Field wiring to be performed at time of appliance installation.

Caution Do not turn on the power until the electrical wiring is finished.
This may cause electrical shock or damage to the equipment to occur.

- The electrical supply required by the water heater is 120V AC at 60 Hz.
  The power consumption may be up to 355W or higher if using optional accessories.
  Use an appropriate circuit.
- Do not disconnect the power supply when not in use. When the power is off, the freeze prevention in the water heater will not activate, resulting in possible freezing damage.

- Do not let the power cord contact the gas piping.

Tie the redundant power cord outside the water heater. Putting the redundant length of cord inside the water heater may cause electrical interference and faulty operation.

Ground

- To prevent electrical shock, provide a ground with resistance less than 100Ω. An electrician should do this work.
- A grounding screw is provided on the back of the junction box lid.

Do not connect the ground to the city water or gas piping. Do not tie the ground to a telephone line.

Breaker Installation

- Mount a device which shuts off the electrical path automatically (leakage breaker) when electrical leakage is detected.

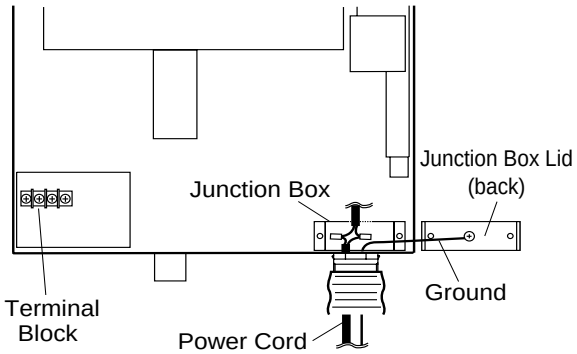

1. Unscrew the junction box lid and open.
2. Push the power cord through the bottom of the unit.
3. Connect the live and neutral wires to the black and white wire in the junction box.
4. Screw the ground wire to the ground screw on the back of the junction box lid and close junction box.

Remote Controller

• Applicable Model

N-132M	
Remote controller	RC-7646M-2

Install the remote controller according to the instructions in the Installation Guide (p. 64).

- The N-132M can be programmed so that it will default to one of four temperatures if the remote controller is removed (180, 140, 130, 120°F). To change the default temperature, the remote controller must be initially installed, and removed after programming.

* Changing the default temperature setting:

1. Within the first ten minutes of connecting electrical power to the unit, but before pressing the Power On/Off button, hit the up [▲] or down [▼] button on the remote controller. This will put the unit into maintenance writer mode. If pressing either of these buttons does not put the unit into maintenance writer mode, unplug the unit for sixty seconds and try again.
2. The maintenance monitor item number will flash on the display. (the initial item number will be “99”).
3. The up [▲] and down [▼] buttons can be used to change the maintenance writer item number.
4. Choose a temperature from the chart below and set the 14 and 15 maintenance writers according to the chart. Pressing the Flow Meter Alarm Set button for 0.5 seconds will switch the indicated item number from “OFF” to “ON” or “ON” to “OFF”. If the Priority lamp is flashing when an item number is displayed, this indicates an “ON” setting for that item number, and if the Priority lamp is off, the item number is off.
   *Do not change the other item numbers. This may cause a fault in the water heater.
5. After setting the 14 and 15 item numbers for the desired temperature, press and hold the up [▲] and down [▼] buttons together for five seconds to confirm the new settings. The remote controller will emit a tone when the settings are confirmed. If this is not done, the unit will not put the setting changes into effect. After confirming the setting, remove the remote controller to initiate the default temperature setting.

Note: The setting changes can be cancelled by pressing the Power On/Off button before confirming the settings, or if the unit is left alone for ten minutes without confirming the settings. If the default setting needs to be changed again, disconnect the electrical power to the unit, reconnect it and follow this procedure again.

Temp. \ Item No.	14	15
180°F	ON	ON
140°F	OFF	ON
130°F	ON	OFF
120°F*	OFF	OFF

* Factory Default Setting

Connecting Remote Controller Cord to Unit

- Keep the remote controller cord away from the freeze prevention heaters in the unit.
- Tie the redundant cord outside the water heater. Do not put the extra length inside the equipment.
- The remote controller cord can be extended up to 300' with 18AWG wire.
- Use a Y type terminal with a resin sleeve. (Without the sleeve, the copper wire may corrode and cause problems).
- Be sure to hand tighten when screwing to the terminal block. Power tools may cause damage to the terminal block.

Remote controller cord

- For extensions, a 26' cord can be purchased (Part # RC-CORD26) or use 18AWG wire.
- Install according to the National Electrical Code and all applicable local codes.

1. Leave enough slack so that the remote controller cord will not be damaged if the unit is removed from the wall.
2. Remove the front cover of the heater (4 screws).
3. Pass the remote controller cord through the wiring throughway and into the unit.
4. Connect the Y terminals at the end of the remote controller cord to the terminal block.
5. Secure the remote controller cord with a clamp.
6. Replace the front cover.

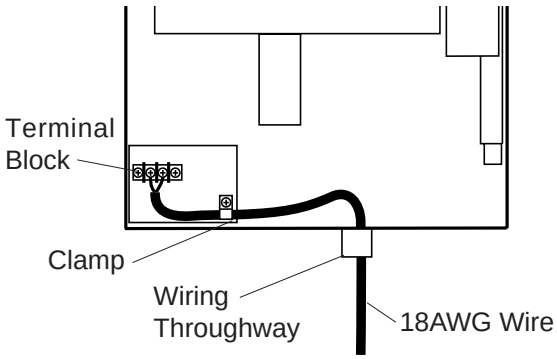

Pump Wiring

* This feature is not available when using the Quick Connect Multi System feature.

Connecting the pump control wire

1. Leave enough slack so that the pump control wires will stay connected if the unit is removed from the wall.
2. Remove the front cover of the heater (4 screws).
3. Cut off the connector at the end of the pump control wires.
4. Wire the pump control wires through the wiring throughway and connect them to the wiring inside the pump (this will be the power supply for the pump, do not also connect 120 V to the pump).
   If a large pump is being used (greater than 85W) use the voltage from these wires as the signal to close a normally open relay through which 120 V will be supplied directly from a wall circuit to the pump.
5. Replace the front cover.

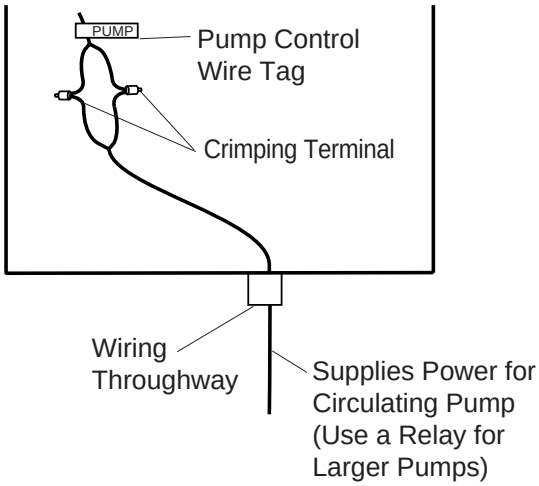

Relay connection with larger pumps (>85 W)

1. Locate and prepare the pump control wires as described above.
2. Choose a suitable installation location for the relay where it will be protected from moisture.
3. Connect the pump control wires from the heater to the signal input on the relay.
4. Cut one of the electrical supply leads and wire it across the open terminals of the relay.
5. Secure all connections and replace the front cover of the heater.

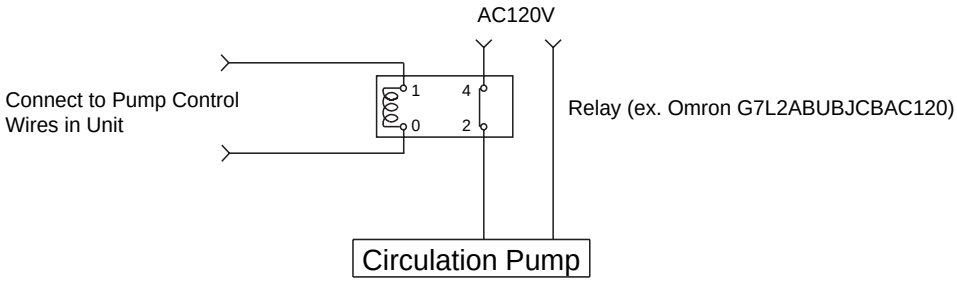

13. Maintenance

Periodically check the following to ensure proper operation of the water heater.

- The venting system must be examined periodically by a qualified service technician to check for any leaks or corrosion.
- The burner flame must be checked periodically for a proper blue color and consistency.
- If the flame does not appear normal, the burner may need to be cleaned.
- If the burner needs to be cleaned, it must be performed by a qualified service technician.
- Do not obstruct the flow of combustion and ventilation air.
- The pressure relief valve must be operated once a year to ensure that it is functioning properly and there is no obstruction. Turn the power off to the unit before opening the relief valve, and make sure that water draining out of the valve will not cause any damage.
- If the relief valve discharges periodically, it may be due to thermal expansion in a closed water system. Contact the water supplier or a local plumbing inspector on how to correct this situation. Do not plug the relief valve.
- See Operation Manual for further maintenance.

Warning: There is a scald potential if the output temperature is set too high.
Should overheating occur, or the gas supply fail to shut off, turn off the manual gas control valve to the appliance.
Do not use this appliance if any part has been under water. Immediately call a qualified service technician to inspect the appliance and to replace any part of the control system and any gas control which has been under water.
Periodically check and clean the filter inside the cold water inlet of the unit.

14. Trial Operation

The installer should test operate the unit, explain to the customer how to use the unit, and give the owner this manual before leaving the installation

- Preparation ····· (1) Open a hot water fixture to confirm that water is available, and then close the fixture.
  (2) Open the gas supply valve, turn on the power supply, and press the Power On/Off button on the remote controller (the Operation lamp will turn on).

(1) Open a hot water fixture and confirm that the Burner On lamp comes on, and that hot water is being produced. (If necessary, repeat until the air in the gas piping is bled out).
  * White smoke may be noticed from the exhaust vent during cold weather. However, this is not a malfunction of the unit.
  * If an “11” error code appears on the remote controller, turn the unit off and then back on again, and then open a hot water fixture again.

(2) Change the temperature setting on the remote controller and check that the water temperature changes.

- If the water heater does not operate normally, refer to “Troubleshooting” in the Operation Manual.

* After the trial operation, clean the filter in the cold water inlet.

<If installed with a quick connect multi-system>

- Turn the system power on with the remote controller.
- Slowly open a hot water fixture and check that the units ignite sequentially. Check to see that the hot water temperature is the same as the temperature displayed on the remote controller. (*1)

* If both units do not ignite, switch which unit will ignite first by pressing the Max. or Min. Manifold Pressure Set Button on the circuit board (see p. 59). (*2)

Unit A Ignites Unit B Doesn't Ignite	Press Max. or Min. Manifold Pressure Set Button on Unit B →	Unit A Doesn't Ignite Unit B Ignites

* If an 11 or F11 error code flashes on the remote controller, hit the Power Button on the remote controller off and on 2-3 times.

* If (*1) and (*2) cannot be done, the Quick Connect Cord may not be properly connected. Check that the cord is properly connected.

⚠ Caution

Handling after trial operation

- If the unit will not be used immediately, close off all gas and water shutoff valves, drain all of the water out of the unit and the plumbing system to prevent the unit and system from freezing, and bleed the gas out of the gas line.

  Freezing is not covered by the warranty.

Lighting Instructions

This water heater does not have a pilot. It is equipped with an ignition device that automatically lights the burner.
Do not try to light the burner by hand.

1. Read the safety information in the installation manual or on the front of the water heater.
2. Turn off all electrical power to the unit.
3. Do not attempt to light the burner by hand.
4. Turn the gas control manual valve (external to the unit) clockwise to the off position.
5. Wait five minutes to clear out any gas. If the smell of gas remains, stop, and follow the instructions on page 3 of this manual.
6. Turn the gas control manual valve counterclockwise to the on position.
7. Turn on electric power to the unit.
8. The unit will now operate whenever hot water is called for. If the unit will not operate, follow the shutdown instructions and call a service technician.

Shutdown Instructions

1. Stop any water demand.
2. Turn off electric power.
3. Turn the gas control manual valve clockwise to the off position.

Should overheating occur, or the gas supply fail to shut off, turn off the manual control valve to the appliance.

15. Dimensions

N-132M

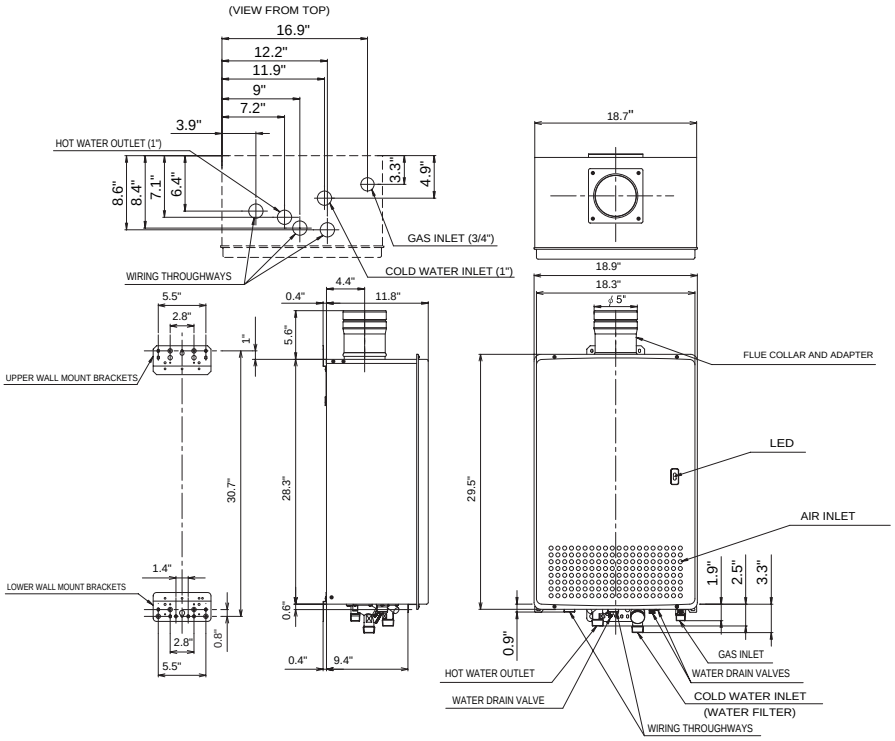

WIRING DIAGRAM (MODEL : N-132M)

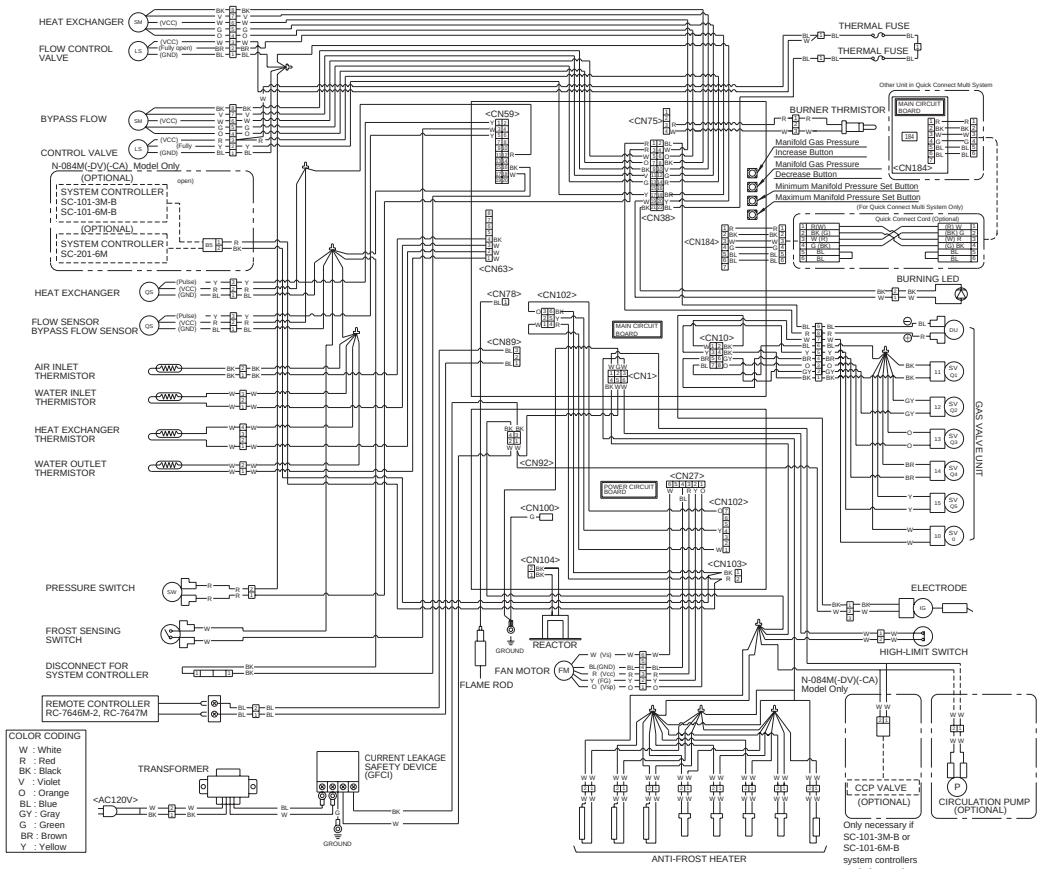

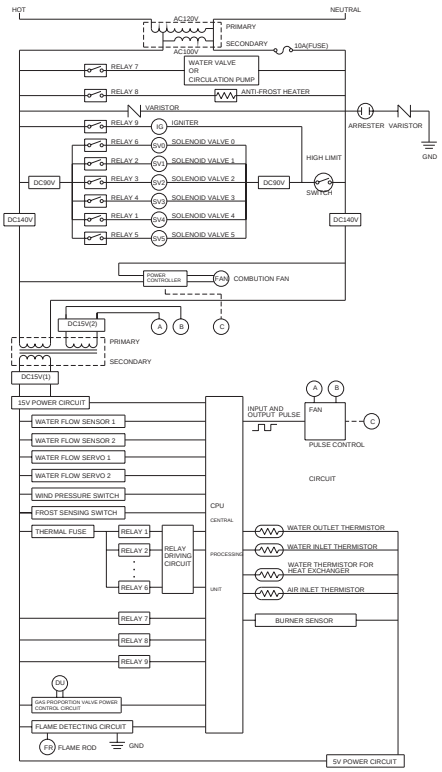

Connecting Quick Connect Cord

For Quick Connect Multi System Installation use a Quick Connect Cord (Sold Separately).

Caution

The wire coloring on the Quick Connect Cord will not be the same as the wire coloring from the connection plug inside the unit.

* The remote controller can be connected to either unit A or B.

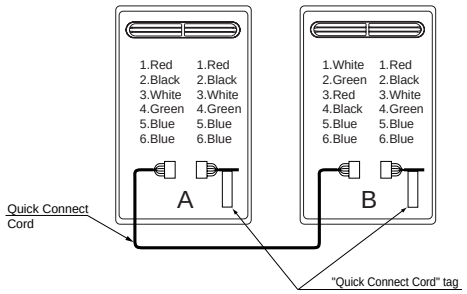

Instruction for connecting the Quick Connect Cord to each unit:

1. Turn off the power.
2. Remove the front cover of the heater (4 screws).
3. Pass the Quick Connect Cord through the wiring throughway and into the unit.
4. Plug the connector on the Quick Connect Cord to the receptacle inside the unit.
5. Attach the ground wire of the Quick Connect Cord to the terminal block fixing plate.
   (If the ground wire is not attached, electrical noise may cause problems)
6. Secure the coupling cord with a clamp.
7. Replace the front cover.

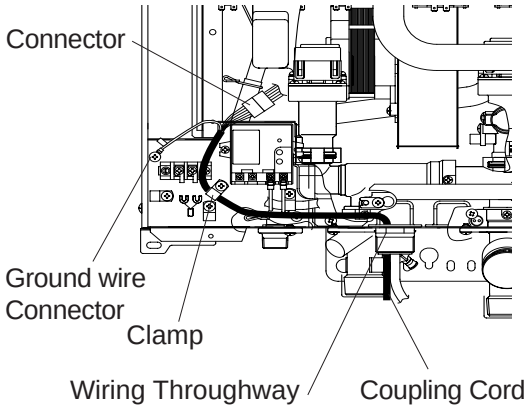

16. Multi-System

Install one system controller (SC-201-6M) for every six units.

A. Installation without a recirculation system

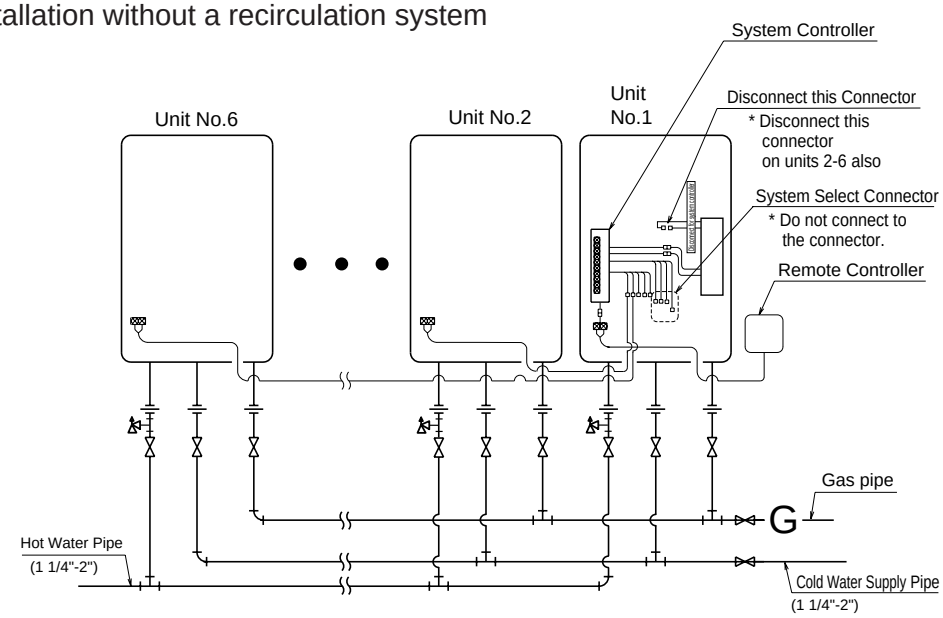

- Insulate or apply heating materials to both the cold water supply piping and the hot water piping to prevent freezing during cold weather and to prevent heat loss through the piping.

B-1. Example of Recirculation with a Multi-System

This system will make hot water more quickly available to remote fixtures.
The pump will circulate water through the loop until the entire loop is warm, and then the system controller will turn off the pump until the loop cools down.

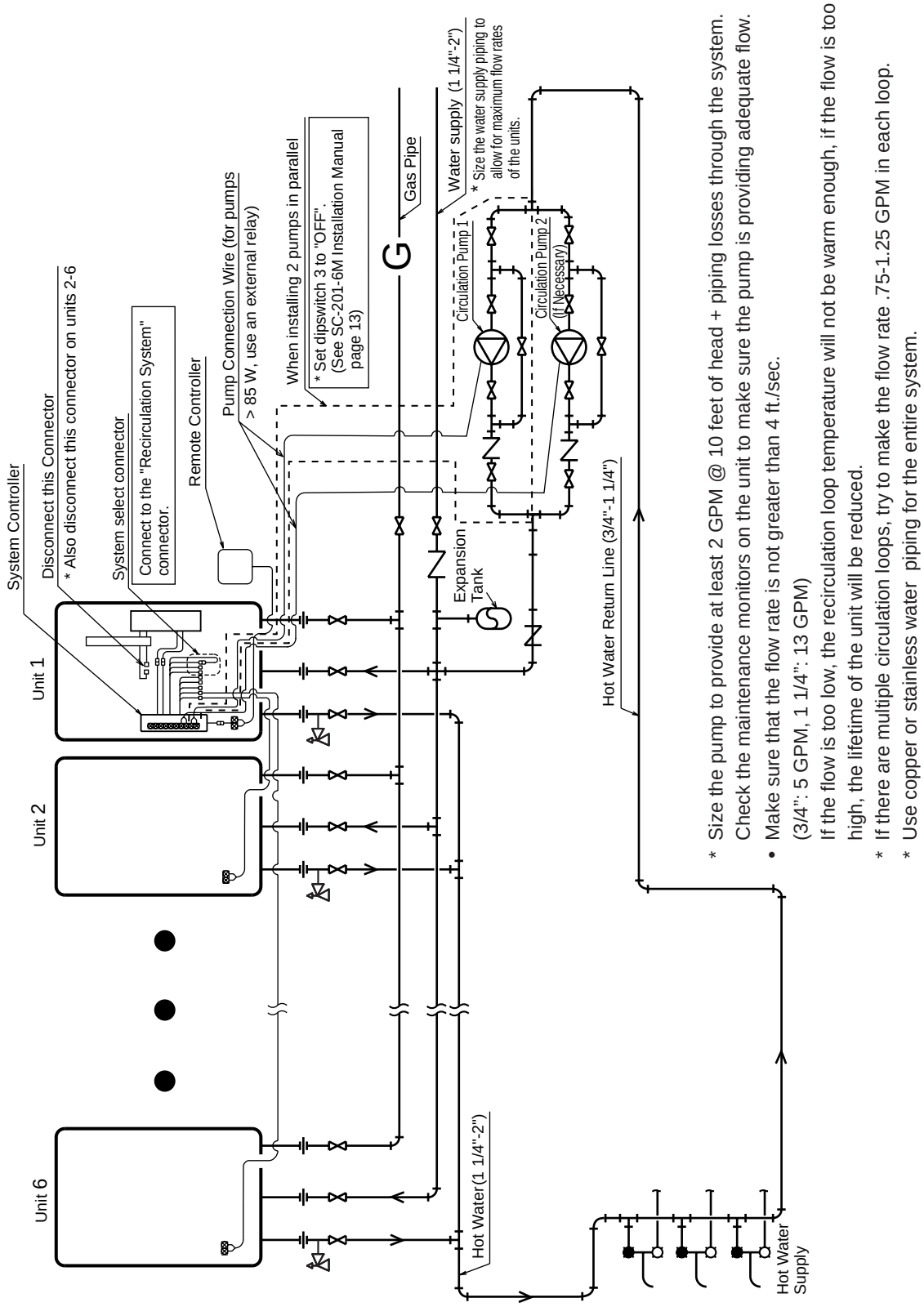

B-2. Example of Installation with a Storage Tank and Recirculation System

The pump will push water through the Multi-System to heat up the tank.
When the return temperature is high, the flow within the device will be limited to 2.5 GPM*.
(For the 84M, the flow will be limited to 1.25 GPM.)

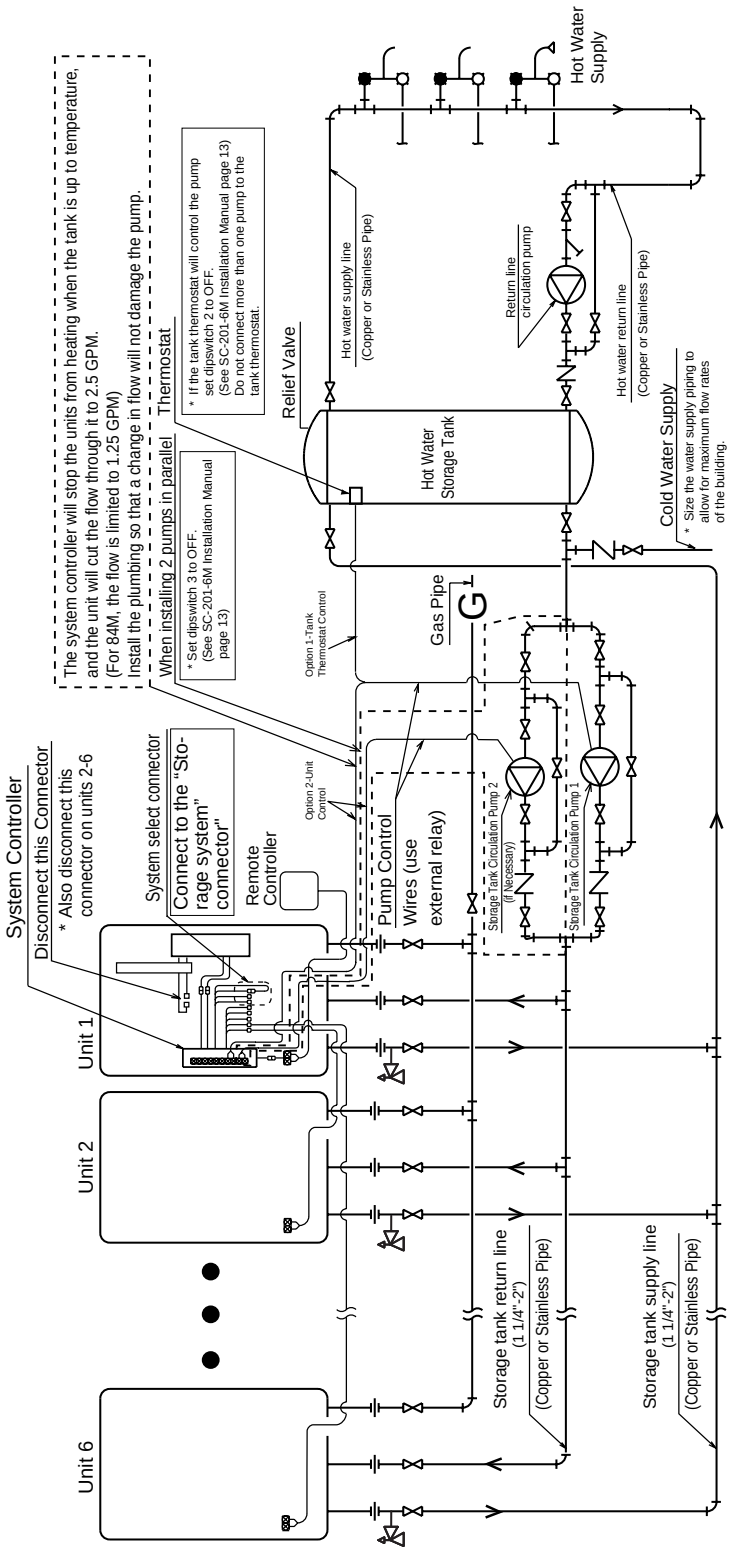

* For the set temperature of the remote control, use the temperature (of the thermostat) + about 9°F.

* To achieve the highest recovery, size the storage tank circulation pump for maximum capacity.
(N-132M: 12 GPM (each)@ 50 ft. of head (160°F setting or less), N-084M: 7.4 GPM (each)@ 40 ft. of head (160°F setting or less) + piping losses through the system). Verify the supply pressure to the units is at least 30 PSI.

Multi-System Wiring (Use SC-201-6M)

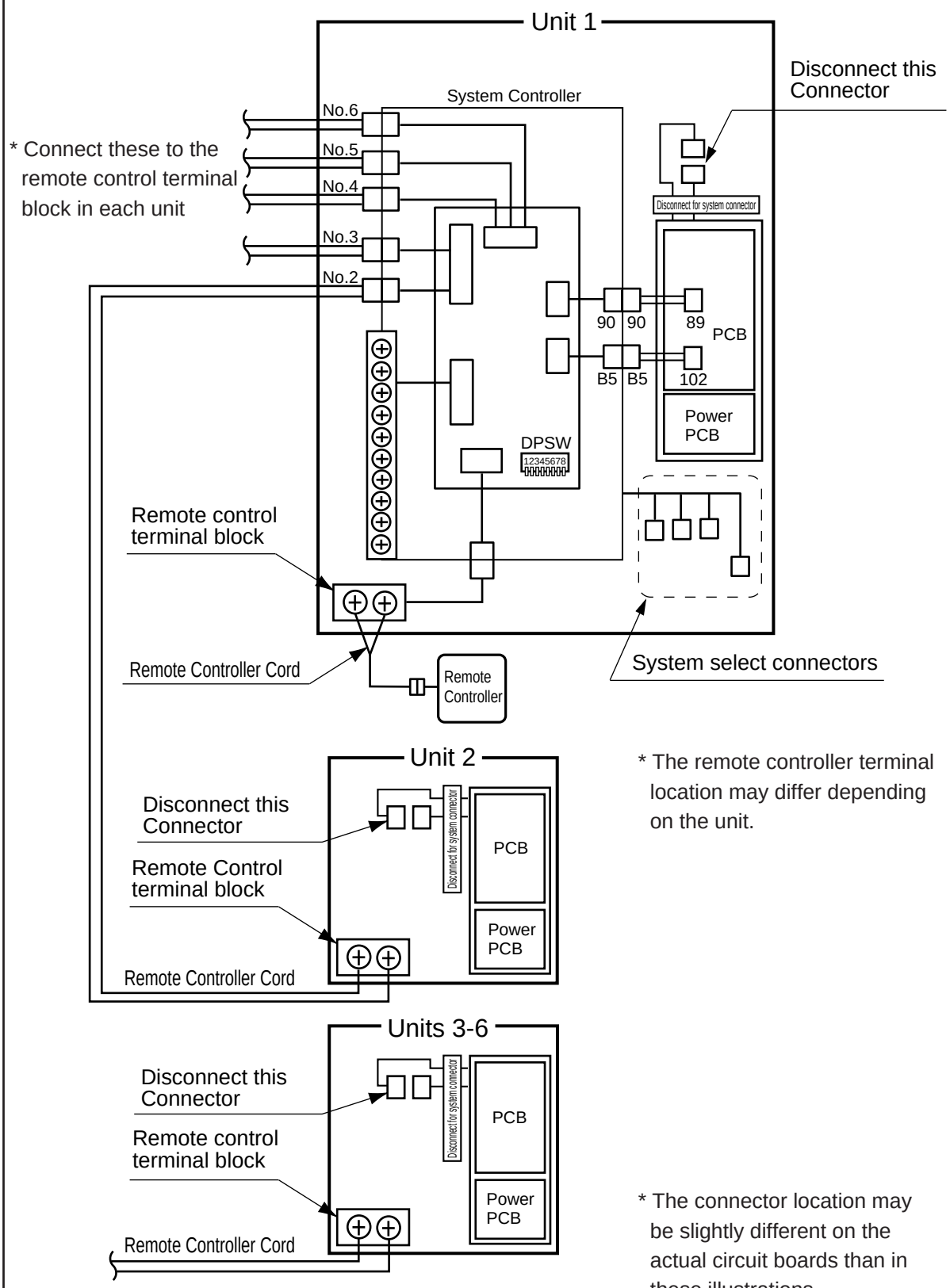

* The remote controller terminal location may differ depending on the unit.

* The connector location may be slightly different on the actual circuit boards than in these illustrations.

Remote Controller RC-7646M-2

Installation Guide

For Installers:
Read this installation guide carefully before carrying out installation.

NORITZ AMERICA CORPORATION

Note

Do not connect power to the water heater before the remote controller has been properly installed.

Included Parts List

Part Name	Quantity
Remote Controller	1
Wall Packing	1
Phillips Roundhead Wood Screw	2
Wall Anchor	2

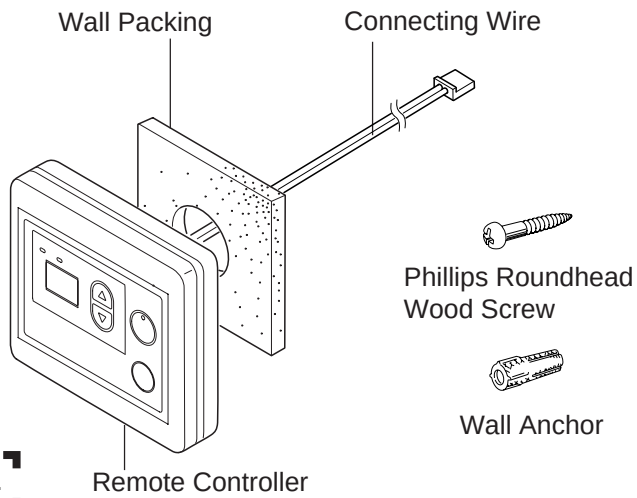

Do not disassemble the remote controller.

Notes on the Installation Location

- The remote should be installed in an easily accessible location.
- Avoid installing in a place where water may splash on the controller.
- Avoid locations where special chemical agents (e.g., benzene, fatty and oily detergents) are used.
- Avoid outdoor installation, or installation in an indoor location where it will be exposed to direct sunlight.

Connection of Remote Controller Cord

White Connector → To Remote controller

Y-shaped terminals (two-core) → To Water heater

* Confirm the connection with the labels at both ends of the remote controller cord.

- A 26' cord can be purchased separately (Part # RC-CORD26).
- The remote controller cord can be extended up to 300 ft. by splicing the cord and using 18 gauge wire to extend the cord to the appropriate length.

Installation

1. Apply Wall Packing to the rear side of the remote controller.
2. Connect the remote controller wires to the separate remote controller cord.

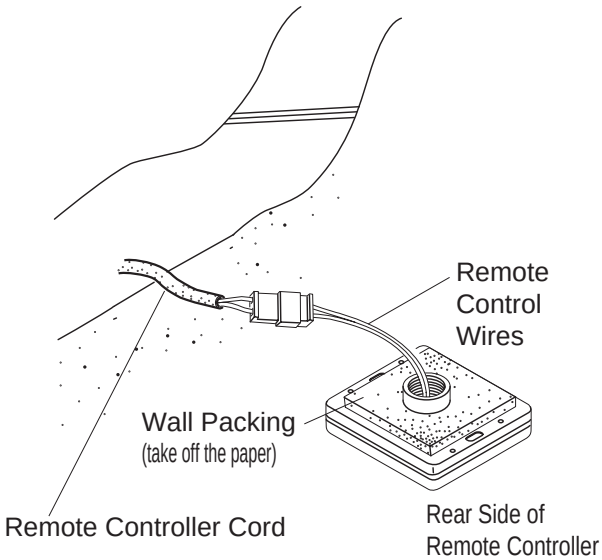

3. Remove the cover of the remote control, mark the location of the screw holes, and drill holes for the wall anchors.
4. Insert the wall anchors, screw the remote control to the wall and replace the cover.

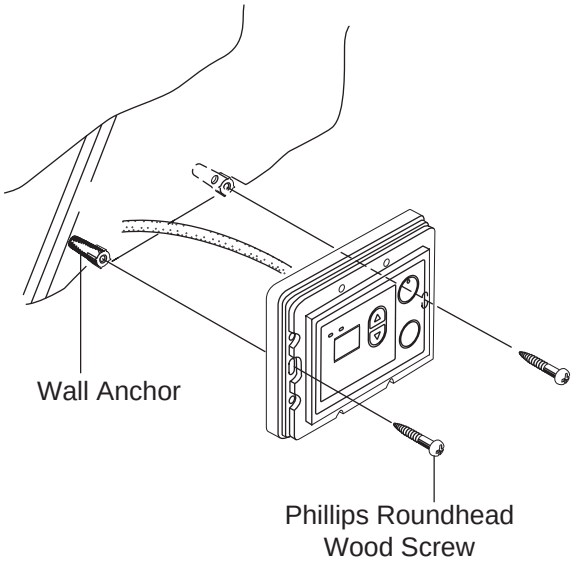

Installing the Remote Controller Outdoor Junction Box

1. Insert the remote controller wires through the wall pipe and secure the wall pipe to the remote controller. Locate the remote controller wall packing, slide it over the pipe and wires, and apply it to the rear side of the remote.

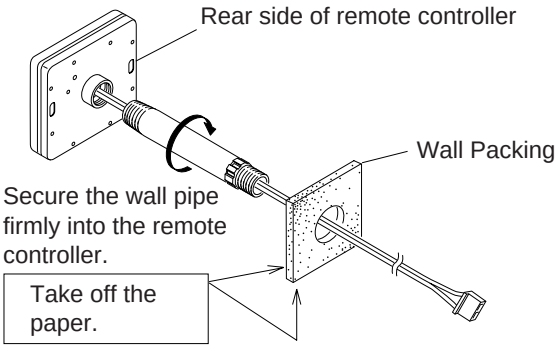

2. Drill a ⌀1-1/4" hole in the wall where the remote controller will be installed.

* Do not install the remote controller in a location that is exposed to moisture, direct sunlight, or chemical agents. These can damage the remote controller.

3. Insert the wall pipe containing the remote controller wires through the hole.

4. Slide the junction box packing and the junction box over the remote controller wires and wall pipe protruding from the outside wall.

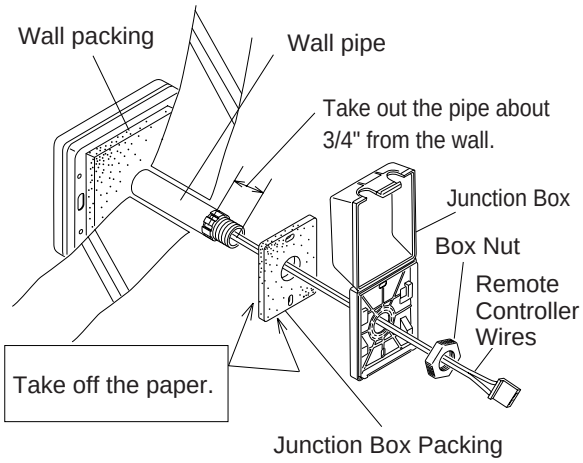

5. Slide the box nut over the remote controller wires and screw it onto the wall pipe.

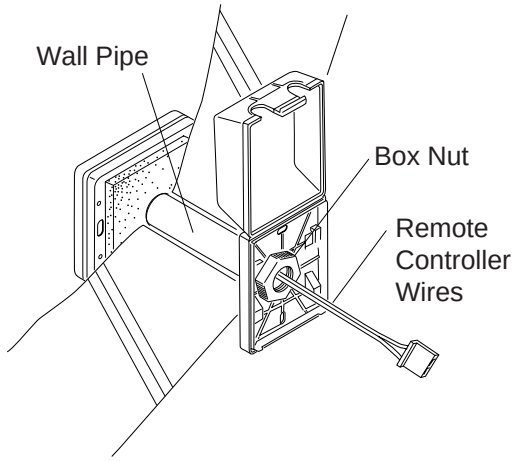

6. Connect the remote controller wires to the separate remote controller cord inside the box. Wind the excess remote controller wire on the provided hooks as illustrated below.

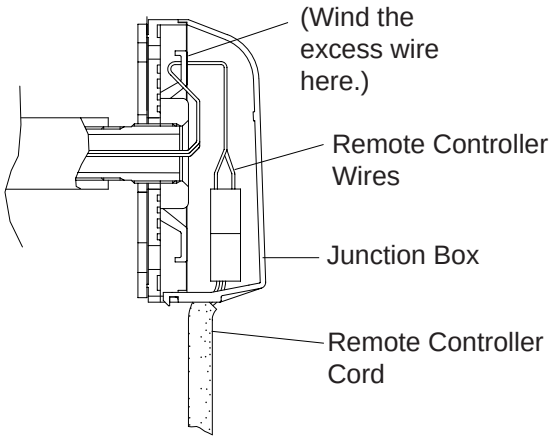

Tie the redundant length of the remote controller cord outside the junction box.

7. Close the junction box.

Automatic Instantaneous Water Heater
NORITZ AMERICA CORPORATION
25172 Arctic Ocean Dr.Suite 102.Lake Forest CA 92630
Tel : (949)420-0409
Model : N-132M
Type of Gas : Natural Gas
BTU Input : Max.380,000～Min.22,500
Recovery Rate : 376 Gallons/Hour
Inlet Gas Pressure : Min. 5～Max.10.5inches
Manifold Gas Pressure : Min.0.6～Max. 2.0inches
Electrical Rating : AC 120 Volts 60Hz
Max.Water Pressure : Min. 15psi～Max.150psi
ANSI Z21.10.3b-2004

FOR YOUR SAFETY
Do not store or use gasoline or other flammable vapors and liquids in the vicinity of this or any other appliances

REQUIRED CLEARANCES TO COMBUSTIBLES

Minimum Clearances from Combustible of Non-combustible Construction		
Clearance	Outdoor Install	Indoor Install
Top of heater	36 inches	12 inches
Back of heater	0 inch	0 inch
Front of heater	24 inches	4 inches
Side of heater	24 inches	2 inches

SERIAL NUMBER @@@@. @@ — @@@@@@

Made in JAPAN NR99 +++++

⚠ WARNING

HIGH TEMP. WARNING	When using hot water or bathing,check the temperature first with your hand. Otherwise, you may get scalded.
FIRE WARNING	Do not leave easily flammable items near the heater or the air intake or exhaust. Otherwise a fire could occur.
PROHIBITED	**VENTILATION WARNING (INDOOR ONLY)** Take care to provide adequate ventilation during heater use. However, do not use a range hood ventilation fan. Otherwise, carbon monoxide poisoning could occur.
PROHIBITED	**Corrugated panelling PROHIBITED (Outdoor heater only)** Do not use corrugated panelling around the outdoor heater. It may cause carbon monoxide poisoning or a fire.

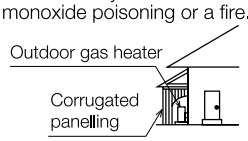

⚠ CAUTION

CONTACT PROHIBITED	**BURN CAUTION** During heater use or soon after, do not touch high temperature parts such as the heater body, exhaust flue or exhaust outlet.

Please read Owner's Manual thoroughly to ensure proper use of the water heater. Incorrect operation can result in scalding and fire.

- Use only the gas type specified on the heater.
- For remote operation, use the remote control described in the Owner's Manual.
- When the remote control is connected, operate the remote control in accordance with the instructions displayed on it, and confirm ignition and extinguishment on the remote control display.
- Do not use water that has been stored inside the heater for a long period as drinking water or cooking water.
- Perform inspection and maintenance periodically in accordance with the Owner's Manual.
- If the temperature drops severly in winter and there is the possibility of the heater freezing, prevent freezing using the method described in the Owner's Manual. If this is not done, the heater may freeze and become damaged.
- If you are moving the water heater, contact the manufacturer.
- If a malfunction occurs(smoke from the exhaust port, burning smell, etc.) or an emergency occurs(earthquake, fire, etc.), stop using the water heater and contact your nearest service center to arrange for an inspection.
- Do not tamper with or modify the vent damper.
- Use only category Ⅲ venting material.
- Wiring diagram behind the front cover.

FOR YOUR SAFETY READ BEFORE OPERATING

WARNING: If you do not follow these instructions exactly, a fire or explosion may result causing property damage, personal injury or loss of life.

A. This water heater does not have a pilot. It is equipped with an ignition device that automatically lights the burner. Do not try to light the burner by hand.

B. BEFORE OPERATING smell all around the water heater area for evidence of leaking gas. Be sure to smell next to the floor because some gas is heavier than air and will settle on the floor.
WHAT TO DO IF YOU SMELL GAS.
- Do not try to light any appliance.
- Do not touch any electric switch, do not use any phone in your building.
- Immediately call your gas supplier from a neighbor's phone. Follow the gas supplier's instructions.
- If you cannot reach your gas supplier, call the fire department.

C. Use only your hand to turn the gas valve knob. Never use tools. If the knob will not turn by hand, don't try to repair it. Call a qualified service technician. Force or attempted repair may result in a fire of explosion.

D. Do not use this water heater if any part has been under water. Immediately call a qualified service technician to inspect the water heater and to replace any damaged parts.

OPERATING INSTRUCTIONS

1. STOP! Read the safety information above.
2. Turn off all electric power to the appliance.
3. Do not attempt to light the burner by hand.
4. Turn the gas control manual valve (installed on the gas supply line external to the unit) clockwise to the position.
5. Wait five (5) minutes to clear out any gas. If you then smell gas, STOP! Follow "B" in the safety information above on this label. If you don't smell gas, go to the next step.
6. Turn the gas control manual valve (installed on the gas supply line external to the unit) counterclockwise to the full ON position.
7. Turn on all the electric power to the appliance.
8. If the appliance will not operate, follow the instructions " To Turn Off Gas To Appliance" and call your service technician or gas supplier.

TO TURN OFF GAS TO APPLIANCE

1. Turn off all electric power to the appliance if service is to be performed.
2. Turn the gas control manual valve (installed on the gas supply line external to the unit) clockwise to the full OFF position.

DANGER

Vapors from flammable liquids will explode and catch fire causing death or severe burns.
Do not use or store flammable products such as gasoline, solvents or adhesives in the same room or area near the water heater.

Keep flammable products:
1. Far away from heater.
2. In approved containers.
3. Tightly closed
4. Out of children's reach

Vapors:
1. Cannot be seen
2. Vapors are heavier than air
3. Go a long way on the floor
4. Can be carried from other rooms to the main burner by air currents.

DANGER

Hot Water Heater temperature over 125 ℉ can cause severe burns instantly or death from scalding.
Children, disabled and elderly are at the highest risk of being scalded.
Feel water temperature before bathing or showering.
Temperature limiting valves are available, ask professional person.

WARNING: California Proposition 65 lists chemical substances known to the state to cause cancer, birth defects, death, serious illness or other reproductive harm. This product may contain such substances, be their origin from fuel combustion (gas, oil) or components of the product itself.

A temperature and pressure relief valve listed as complying with the standard for Relief Valve and Automatic Gas Shutoff Devices for Hot Water Supply System, ANSIZ21. 22. shall be installed at the time of installation of the heater in the location specified by the manufacturer. Local codes shall govern the installation of relief devices for safety operation of the water heater. The relief valve must not be removed or plugged.